New Meccano Model

Fork Lift Truck

OUR new model this month the realistic Fork Lift Truck shown in Fig. 1 on this page, is built with a No. 6 Outfit. It is fitted with a simple castor steering unit controlled from the driving position. The hoist is operated by turning a Crank Handle mounted at the front of the model.

The chassis is assembled by connecting two 12½" Angle Girders together by a 5½" × 2½" Flanged Plate 1 at the front, and by a 5½" Strip 2 at the rear. The front wheels are fixed on a 6½" Rod mounted in Flat Trunnions bolted to the chassis, and a support for the rear castor unit is provided by a 3½" × ½" Double Angle Strip 3 bolted between the chassis Girders.

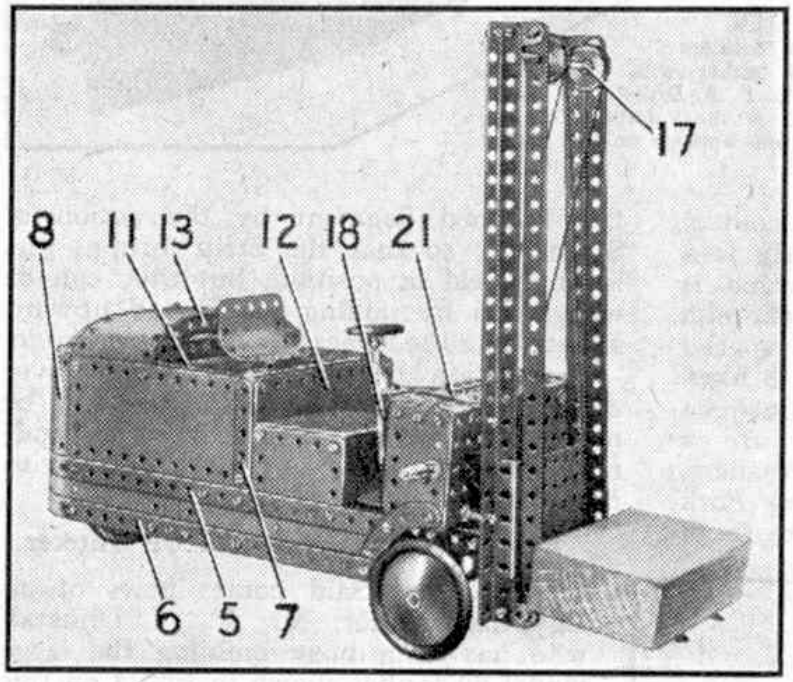

Fig. 1. A fork lift truck that can be built with Outfit No. 6.

The castor unit is made by bolting a Flat Trunnion to each flange of a 2½" × 1½" Flanged Plate 4. The Flat Trunnions are fixed at the lowest limit of the slotted holes of the Flanged Plate in order to provide clearance for the twin rear wheels. These wheels are fixed on a 3½" Rod mounted in the Flat Trunnions and held in position by Spring Clips. The unit is pivoted to the chassis by a ⅜" Bolt passed through the centre of the Flanged Plate 4 and attached by two nuts to the Double Angle Strip 3. Two Washers are placed on the ⅜" Bolt for spacing purposes.

The lower part of the body on each side is assembled on two compound strips 5 and 6. Strip 5 consists of two 5½" Strips overlapped three holes, and strip 6 is made from two 5½" Strips overlapped four holes. Both compound strips are bolted at the front to a small radius Curved Strip attached to Flanged Plate 1, and at the rear they are connected by Angle Brackets to the Strip 2. The space between Strips 5 and 6 is filled in by a 2½" × 1½" and two 5½" × 1½" Flexible Plates. One of the 5½" × 1½" Plates overlaps the compound strips and is used for the lower part of the curved back of the model. The edges of the Plates are braced by two Formed Slotted Strips.

The bolt attaching strip 5 to the Angle Bracket on Strip 2 holds also a vertical 2½" Strip that extends two holes above strip 5. A 5½" × 2½" Flexible Plate forming the upper side is attached to the 2½" Strip, and also to a 3" Strip 7 at the front. The 5½" × 2½" Flexible Plates on each side are extended by 1 11/16" radius Curved Plates 8, and the latter are connected by two 2½" × 2½" Flexible Plates 9. The Plates 9 are linked to the Formed Slotted Strips at the rear by 2½" Strips 10.

The top of the engine cover underneath the operator's seat is made from a Hinged Flat Plate. This is bolted to two 5½" Strips, and the Strips are attached to the sides by Angle Brackets. A 3½" Strip 11 is used to complete this part of the model, and a 5½" × 2½" Flexible Plate 12 is attached to the sides by Angle Brackets. The raised dome to the rear of the operator's seat is made from a 5½" × 2½" and a 4½" × 2½" Flexible Plate curved to shape and bolted to the sides. A division 13 consisting of a 5½" Strip, a 1½" Strip and two 2½" Curved Strips is attached to the centre of the dome by an Angle Bracket. The top of the model behind the dome is filled in by a Semi-Circular Plate bolted to each side of a 2½" × 2½" Flexible Plate. The assembly is bolted to a 3½" × ½" Double Angle Strip 14 fixed to the rear of the model and to

the Hinged Flat Plate.

The floor of the driving compartment is a $3\frac{1}{2}'' \times 2\frac{1}{2}''$ Flanged Plate bolted at one end to a $2\frac{1}{2}'' \times 2\frac{1}{2}''$ Flexible Plate fixed to the side. A $4\frac{1}{2}'' \times 2\frac{1}{2}''$ Flexible Plate 15 and a $2\frac{1}{2}'' \times 2\frac{1}{2}''$ Flexible Plate 16 are bolted direct to the chassis, and a U-Section Curved Plate, opened out slightly, is used to connect the $3\frac{1}{2}'' \times 2\frac{1}{2}''$ Flanged Plate to the Plate 16.

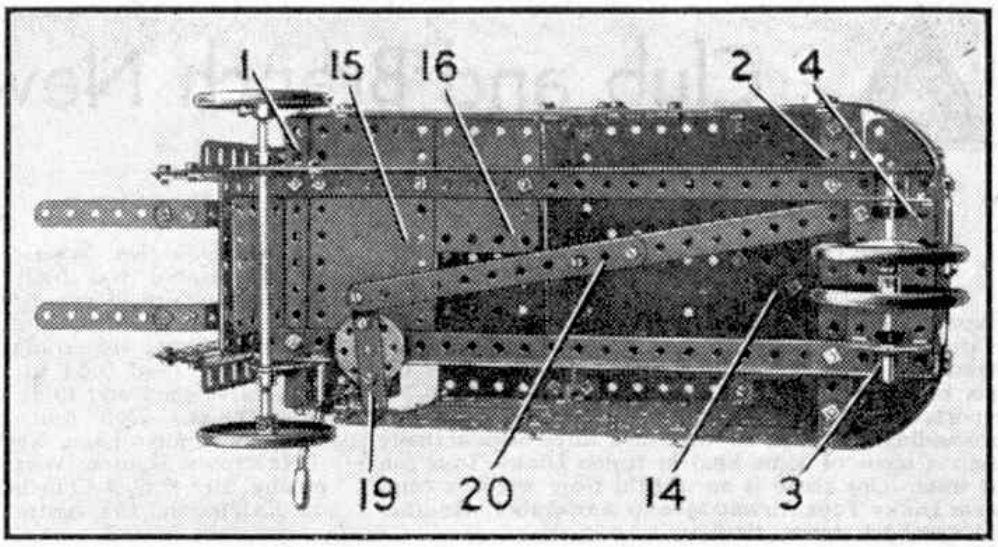

Fig. 2. Underneath view of truck.

The hoist rails on each side are made by joining a $12\frac{1}{2}''$ Strip to a $12\frac{1}{2}''$ Angle Girder by Fishplates. The back of the hoist, a $3\frac{1}{2}'' \times 2\frac{1}{2}''$ Flanged Plate, slides between the $12\frac{1}{2}''$ Girders and Strips. The rails are attached to the Flanged Plate 1 by $\frac{1}{2}''$ and $\frac{3}{4}''$ Bolts. These Bolts are fixed to the rails by nuts, and then attached to the Flanged Plate by two nuts on each Bolt. The upper ends of the rails are joined by a compound $4\frac{1}{2}''$ strip consisting of two $2\frac{1}{2}''$ Strips overlapped one hole.

A $5\frac{1}{2}''$ Crank Handle is mounted in one of the shorter flanges of Flanged Plate 1, and in a Trunnion bolted to the Flanged Plate. Spring Clips are used to keep the Crank Handle in position, and two lengths of Cord are fastened to it. These Cords are led over 1" Pulleys on a Rod 17, and then fastened to the back of the hoist. It is important to make sure that both Cords are the same length so that the hoist operates evenly.

The steering column is mounted in the chassis and in a Fishplate bolted to a $2\frac{1}{2}'' \times \frac{1}{2}''$ Double Angle Strip 18. The lower end of the steering column is fitted with a Bush Wheel, and a $2\frac{1}{2}''$ Strip 19 is bolted across the Bush Wheel. Strip 19 is connected by a compound strip 20 to the castor unit, and lock-nuts (*Cont. on page 94*)

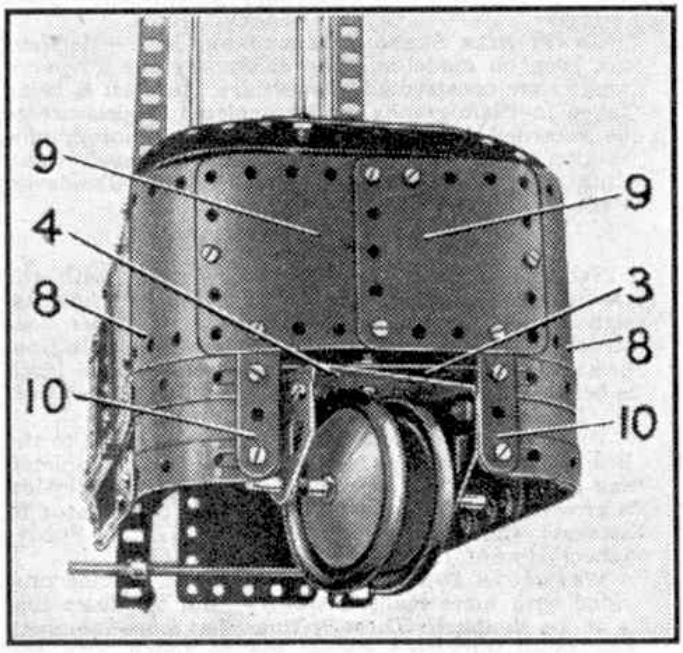

Fig. 3. End view of the truck.

OUTFIT No. 3 MODEL-BUILDING CONTEST

The winter model-building season is in now in full swing, and we hope every reader will take the opportunity of sending in an entry for our latest model-building competition. One of the most successful of last year's competitions was the Outfit No. 4 Contest first announced in the March issue of the "*M.M.*"; this month we announce a similar Contest for models built with Outfit No. 3. Entrants are free to choose any subject they wish for their models, but they must not use any parts other than those included in a No. 3 Outfit, and models must be the unaided work of competitors.

Each competitor is asked to send a photograph or a sketch of his completed model, together with a list of parts used in its construction. A few brief notes covering any points not shown fully in the illustration should also be sent, and the competitor's age, name and address must be written clearly on the back of each illustration submitted.

Entries should be addressed: "*Outfit No. 3 Model-Building Contest, Meccano Ltd., Binns Road, Liverpool 13.*"

There will be two sections to this Contest, for Home and Overseas readers respectively. Entries in the Home Section must reach us by 31st March; Overseas entries will be accepted up to 31st July next.

The following prizes will be awarded in each Section: First, Cheque for £3/3/-; Second, Cheque for £2/2/-; Third, Cheque for £1/1/-. There will be also five prizes each consisting of a P.O. for 10/6, and five prizes each of a P.O. for 5/-.

The Pennine Way—(*Continued from page 64*)

scheme, declaring that such a project would be a boon in linking up the National Parks. The stumbling block to the adoption of the idea is that new tracks will have to be opened, particularly along the southern section of the proposed route. In that region existing footpaths are few, and in some parts of the Peak District restrictions on the use of the open spaces by walkers have long been zealously applied by landowners.

Yet the Pennine Way may be said to exist to a big degree. There are rights of way along 180 of the 250 miles, and only 16 of the remaining 70 miles have been the subject of controversy between landowners and hikers. Thus, it is already possible to tramp from Malham, in Airedale, to Wooler, in Northumberland, using only trodden tracks along England's backbone.

Energetic walkers are striving to complete the scheme which will enable them to hike along the whole 250 miles, covering it in stages of 15–20 miles or less. The Way in its entirety would introduce many people to new scenic charms, for it would help to refute the fairly widespread notion that the Pennine region is completely sullied by towns and smoke.

Luxury Bus Travel in South Africa—

(*Continued from page 69*)

driver's seat. At the rear of the bus is a luggage compartment almost 8 ft. wide and 4 ft. high.

External lights, green at the front and red behind, indicate the height and width of the vehicle and render identification easy on the road at night. Massive front and rear bumpers are part of the design. Their utility was proved on one occasion when a Pretoria-bound bus was unable to leave Johannesburg station owing to a jammed starter. Another bus came up behind and pushed it along until the starter was freed.

In all, more than 100 of these super-saloons have been ordered by the South African Railways, at a cost of just under £7,000 each. The department offers a choice of many delightful round trips, such as that between Durban and Cape Town, via the Garden Route. The excellence of the main roads has made possible these lengthy tours, of which full advantage is taken by South Africans and overseas visitors. Small wonder that travellers prefer this service to that of the trains, and even, in many cases, to a journey by private car. In the heat of summer few cars can equal the comfort of these air-conditioned buses; only one train, the famous "*Blue Train*" of the Cape-Jo'burg run, is similarly equipped.

New Meccano Models—(*Continued from page 83*)

fitted on the bolts used for the purpose allow the steering to operate freely. Double Angle Strip 18 is braced by a 2½" Strip 21 fixed to the Flanged Plate 1.

Parts required to build the model Fork Lift Truck: 2 of No. 1; 14 of No. 2; 3 of No. 3; 2 of No. 4; 10 of No. 5; 1 of No. 6a; 4 of No. 8; 7 of No. 10; 9 of No. 12; 2 of No. 12a; 1 of No. 14; 1 of No. 15; 1 of No. 15b; 1 of No. 16; 1 of No. 19h; 3 of No. 22; 1 of No. 24; 4 of No. 35; 120 of No. 37; 10 of No. 37a; 10 of No. 38; 5 of No. 48a; 2 of No. 48b; 1 of No. 51; 1 of No. 52; 2 of No. 53; 4 of No. 59; 2 of No. 90; 2 of No. 90a; 2 of No. 111; 2 of No. 111a; 3 of No. 111c; 1 of No. 126; 4 of No. 126a; 1 of No. 155; 4 of No. 187; 4 of No. 188; 4 of No. 189; 6 of No. 190; 2 of No. 191; 4 of No. 192; 2 of No. 199; 2 of No. 200; 2 of No. 214; 4 of No. 215.

SPRING BACK BINDERS FOR THE "M.M."

There is no better way of keeping copies of the "*M.M.*" clean and tidy than by using the spring back binder designed for the purpose. This has strong stiff backs and has the name "*Meccano Magazine*" in gilt on the front. It holds 12 copies, and the issues can readily be inserted or taken out. The price is 3/6 including postage.

"A.T.C." on the Southend Line—

(*Continued from page 76*)

automatic train control is very good indeed, mechanical instruments may sometimes go wrong, and perhaps during a fog at night-time there might come a rare occasion when the "*A.T.C.*" gives a wrong indication. This of course does not often happen, but there is a possibility that it might.

Every driver to whom I have spoken about "*A.T.C.*" liked it and agreed what a blessing it was to him in foggy weather. When you consider that during the winter time in one week the "*A.T.C.*" makes over 60,000 correct indications of the distant signals you can well imagine what a wonderful thing is automatic train control.

Sugar from Beet—(*Continued from page 57*)

process is perhaps the most fascinating to watch. At first, the inside of the revolving drum contains a brownish substance, but gradually this turns as white as snow as the sugar is separated.

Molasses is used as a cattle food, and also is distilled into commercial alcohol for a great variety of purposes, including the manufacture of plastics. About 120,000 tons of molasses leave our sugar factories every year.

Finally, the pure refined sugar is dried, cooled and poured into bags. These are filled automatically by hopper, and after sealing are stacked in the vast air-conditioned stores of the factory. The actual time taken in the complete transformation of raw beet into granulated sugar is only about eighteen hours.

"BRITISH RAILWAYS TO-DAY AND TO-MORROW"

An illustrated booklet under this title that has been issued by the Railway Executive gives a brief account of our railways at the present time. The progress that has been made in the two years of nationalisation is recorded and the aims of British Railways in regard to improvements and services, stock, plant and equipment are detailed, while reference is made to many varied aspects of modern railway work.

From the booklet we can sense the importance of the railways to the life of the country. On the passenger side special attention is drawn to travel facilities of all kinds, and a wealth of interesting details are given of freight working in general and of the special measures taken to deal with heavy traffic such as the transport of coal, for home use and for export, collection and delivery methods, and warehousing and steamship services.

A particularly interesting chapter deals with railway workers and arrangements for their welfare and training. What British Railways are doing with regard to motive power and rolling stock also is dealt with, after which permanent way and stations engage attention. There are accounts of improved methods of track laying and maintenance, signalling schemes and new works generally. A list is given of named expresses and a table of mileposts in the history of British railways gives readers a summary of their growth.

With its many illustrations and a folding map, the booklet forms a compact and useful work of reference.

A SCHOOLBOY'S EXHIBITION DEMONSTRATION

At the Schoolboy's Exhibition at the Royal Horticultural Hall, which was open from 31st December 1949 to 14th January 1950 a large exhibit, sponsored by our advertisers Johnsons of Hendon Ltd., the photographic chemical manufacturers, showed by practical demonstrations how easy it is for boys to start Home Photography.

The process of developing films was explained and contact prints, exposed by the boys were developed on the spot. An enlarger was in operation, and after a demonstration on toning and tinting every boy present received a free copy of a book on photography.