THREE SIMPLE BALSA MODEL CARS FOR YOU TO BUILD

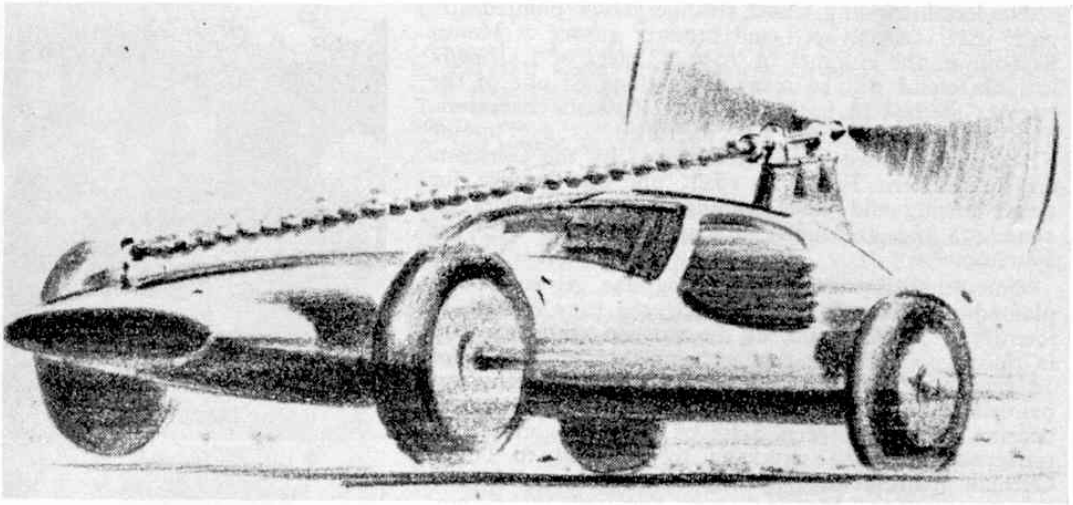

PROPSTERS—OR rubber powered prop-driven dragsters—are very simple to make and fun to operate. Provided you build them quite light and have free running wheels, they can accelerate up to quite amazing speeds over any really flat surface, such as linoleum or wood flooring. If you haven't the room for a long straight run, try them tethered for running in circles.

Propsters are built around a very basic chassis unit. They will run just like this, but for more realism you can easily add a body. The plan shows both the construction of the basic chassis unit together with three alternative body shapes—dragster, roadster and coupe. The plan is reproduced here one half actual size so you need to scale the side view up twice (reproduced) size or obtain a full size plan **(available from Meccano Magazine, 13-35 Bridge St., Hemel Hempstead, Herts.; price 2/6d.).**

Parts required for making a complete chassis unit are:—

One main beam from $\frac{1}{2}$ in. × $\frac{1}{4}$ in. balsa strip, notched as shown
Two axle beams from $\frac{1}{4}$ in. × $\frac{1}{8}$ in. balsa strip
Two axles—cut from 20 gauge wire
One pylon piece—cut from $\frac{1}{4}$ in. sheet balsa
One bearing—bent to shape from 20 gauge brass or dural strip
One wire shaft—bent from 20 gauge wire
One front hook—bent from 20 gauge wire

You will also need a 6 in. diameter plastic propeller; one pair of $1\frac{1}{4}$ in. diameter light plastic wheels; one pair of $1\frac{1}{2}$ in. diameter light plastic wheels, four cup washers and a small bead (or two more cup washers).

Construction should follow this order, after the parts have been cut or bent to shape.

(i) Bind the front hook to the front of the main beam, as shown, and coat the binding with cement.
(ii) Bind the bearing to the top of the pylon, as shown, and coat this binding with cement. (Note the two holes drilled in the pylon piece to facilitate binding the bearing in place, using a needle and thread).
(iii) Cement the pylon to the rear of the main beam.
(iv) Bind an axle to each axle beam, with an equal length of axle protruding each side.
(v) Cement the axle beams and axles into the notches in the main beam, taking care to get them square and symmetrical. Leave the assembly to set at this stage (you can build more chassis units, or cut out the body sides whilst you are waiting).
(vi) Slip a cup washer onto each axle, followed by the wheels, and then turn up the spare end of wire to retain the wheels in place. Note that the smaller wheels go on the front. If you cannot readily get the wheel sizes specified, near sizes will do.
(viii) Finally mount the propeller on its shaft with a bead (or two cup washers) between the bearing and the propeller hub.

The model is ready to run at this stage, so you can try it out with different sizes of rubber band power—or wait until you have fitted the body.

All three bodies are made in the same way. Cut out two sides to the actual shapes shown on the plan. These sides are then cemented to the axle beams (the notches fit over the beams). Note that in the case of the roadster and coupe the sides are parallel. In the case of the dragster the sides are tapered in plan view assembly, and also narrower.

Once the sides have set, simply fill in the top, as shown on the respective plans, with $\frac{1}{16}$ in. sheet to complete a rigid assembly. With the *dragster* an additional canopy piece cut from $\frac{1}{4}$ in. sheet balsa is added. With the *coupe* the windscreen area is covered with a piece of acetate sheet. Note, too, that with both the roadster and coupe the sides are cut from $\frac{3}{4}$ in. thick sheet to leave enough thickness to round off the body shape top and bottom to improve the appearance.

Of course, you are not restricted to just these three body shapes. You can try designing your own, but try to build them from sheet balsa and keep them light as a heavy body will reduce the acceleration possible with your model. For instance, a beautiful body shape carved from solid balsa and fitted in place would probably kill the performance completely, since it would be too heavy. For the same reason, don't overdo the paintwork if you want to finish the models in colour. This, too, can add excess weight.

Experiment with different sizes of rubber motors to get best results. The more powerful the rubber motor the better the acceleration, but the shorter the power run. You can adjust power to range from a pure dragster performance downwards. Scale speeds of over 200 m.p.h. are readily possible !

Remember, too, that propsters do need a really smooth surface to run on for best results. They will get bogged down, and may not even move at all, on a rough surface such as a thick carpet. Given a suitable surface, though, they can use all the power you like to apply. They cannot suffer from wheelspin like a conventional racing car model.

PROPSTERS

A SIMPLE RUBBER POWERED RACING CAR THAT CAN BE CONSTRUCTED IN ANY OR ALL OF THREE VERSIONS. COPYRIGHT OF MECCANO MAGAZINE PLANS SERVICE, 13/35 BRIDGE STREET, HEMEL HEMPSTEAD, HERTS.

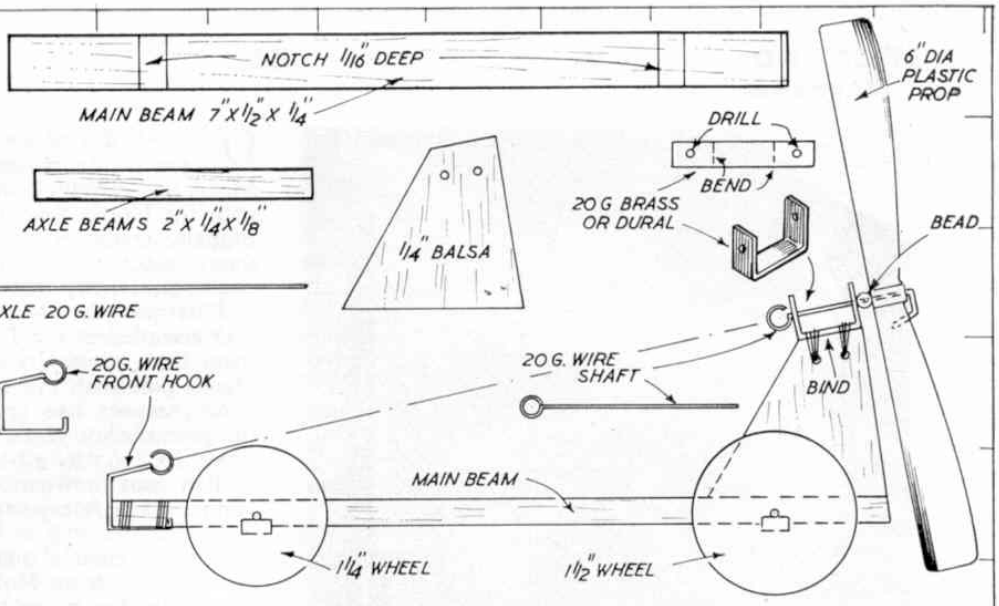

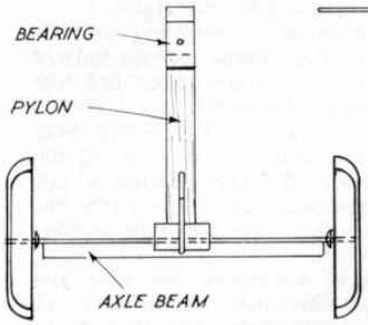

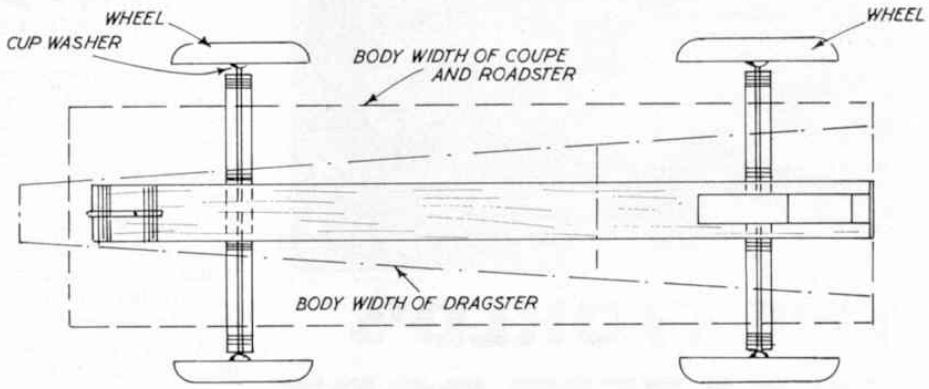

MATERIAL LIST

1 length 1/2" x 1/4" balsa strip
1 length 1/4" x 1/8" balsa strip
6" piece of 3" wide 3/4" sheet balsa
2 lengths 20 gauge piano wire
7" length of 1/4" wide 20 gauge dural or brass strip
The above is enough for making 5 basic models.
In addition each model will require:-
1 pair 1 1/4" dia. plastic wheels
1 pair 1 1/2" diameter plastic wheels
4 cup washers, small bead.
1 6" diameter plastic propeller (flying model aircraft type).
1/16" and 1/4" sheet balsa for making bodies,

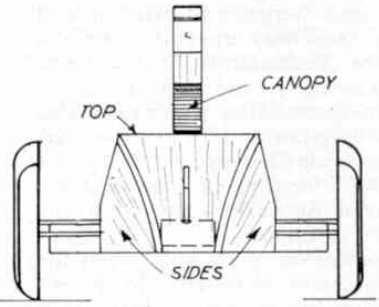

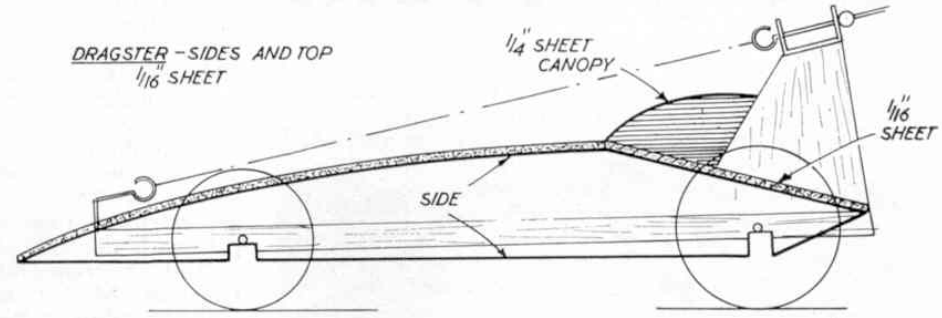

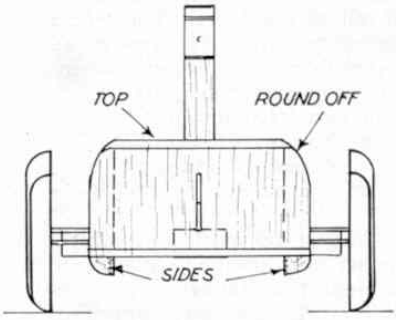

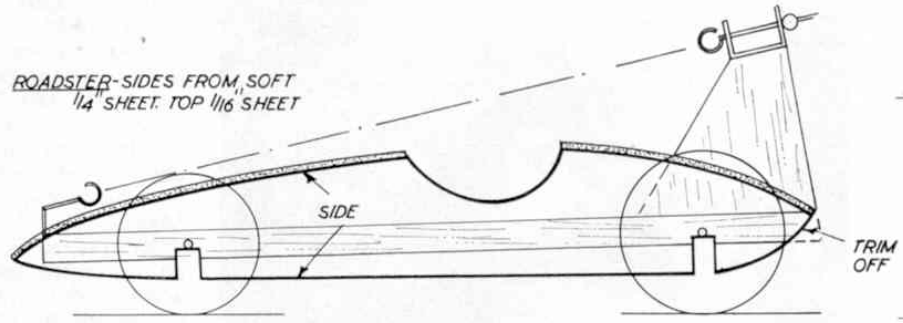

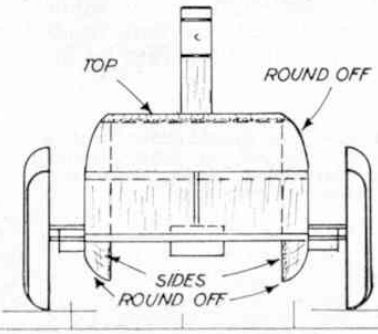

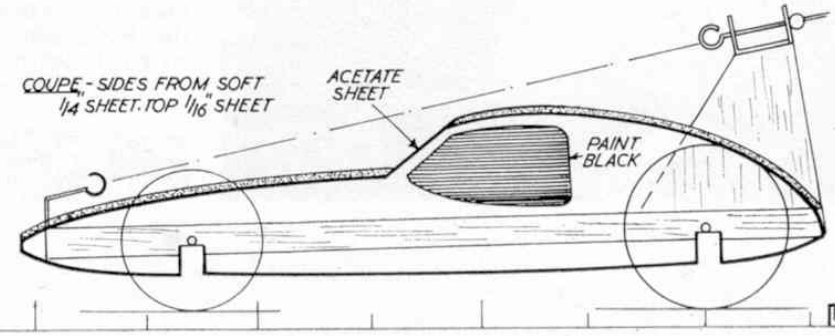

MEC105