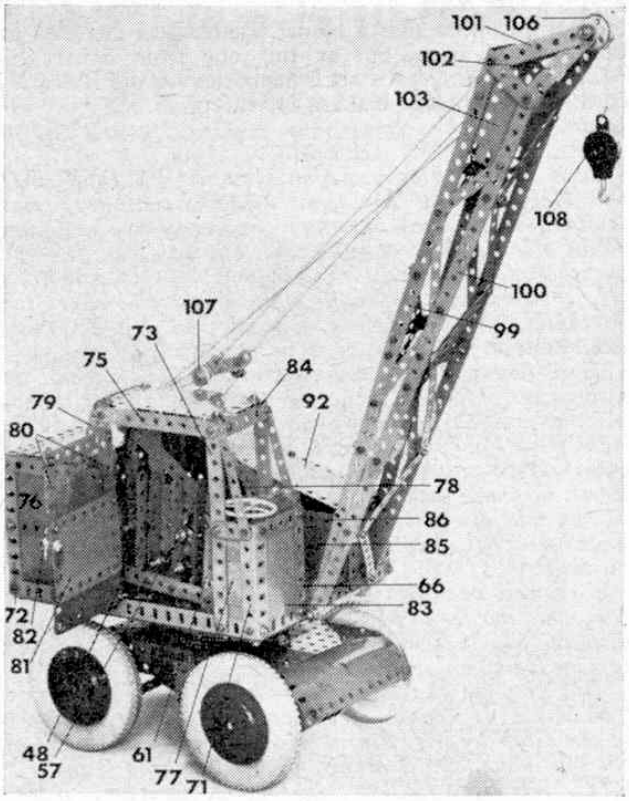

This fully-operating Mobile Crane for advanced modellers is based on the Morris M120 crane produced by Herbert Morris Ltd., Loughborough, Leicestershire.

MOBILE MORRIS IN MECCANO

Spanner describes a comprehensive crane model for advanced builders.

WHEN OUR chief model-builder told me recently that he was working on a copy of a Morris, I naturally assumed that he was talking about one of the well-known range of cars made by B.M.C. You can imagine my surprise, therefore, when he eventually turned up with the large and detailed Mobile Crane featured here! I was beginning to wonder if one of us was going a little mad until I discovered that the model was in fact based on a Morris; not, however, a Morris produced by B.M.C. but a crane manufactured by Herbert Morris Ltd. of Loughborough, Leicestershire.

Before describing construction of the model, it is interesting to take a quick look at the full-size prototype, the Morris M120. This has all the classic lines of the typical "light" mobile crane with its four large wheels, compact body and long jib, although "light" is perhaps not the right word as it weighs something in excess of 13 tons and is capable of lifting a load of six tons to a height of 24½ ft. when fitted with the standard 25 ft. strut jib. Power for the hoisting operations, etc., comes from heavy-duty electric motors which draw their electricity from a generator in turn powered by a high-speed petrol or diesel engine. The crane will slew at 2½ r.p.m. and will travel over level ground at speeds up to 7 m.p.h. when unladen, and 3 m.p.h. with a full load. Overall width is 8 ft.

Turning now to the model, this is not built with any particular Outfit but, on the other hand, does not use any out-of-the-ordinary Parts. It is best to begin construction with the undercarriage. One flange of each of two 7½ in. Angle Girders 1 is extended by a 7½ in. Flat Girder 2, then the Angle Girders are connected by a 5½ in. Angle Girder 3 and two 5½ × 3½ in. Flat Plates 4 and 5, Plate 4 being placed crosswise. Attached by Angle Brackets to the ends of this Plate are two 5½ in. Flat Girders 6, bent as shown, the forward securing Bolts also holding two 2½ in. Stepped Curved Strips in position. The free ends of these Strips are joined by a 5½ × ½ in. Double Angle Strip 7, to which a shaped 5½ × 2½ in. Flexible Plate is bolted, the other side of this Plate being secured between Girder 3 and Plate 4. At the opposite end of the undercarriage, Girders 1 are extended by a further two 2½ in. Stepped Curved Strips, these joined by a 3½ × ½ in. Double Angle Strip 8. A shaped 3½ × 2½ in. Flexible Plate is bolted between this Double Angle Strip and Flat Plate 5.

Bolted to the top of Plates 4 and 5 is a Ball Thrust Race Toothed Disc held away from the Plates by Washers on the shanks of the securing Bolts. To ensure that the Disc is level, three Washers are carried by the long Bolts passing through the lower Plate, while only two Washers are added to the Bolt in the upper Plate. Journalled in the centre of the Toothed Disc and in Plate 5 is a 4½ in. Rod 9, held in place by a Collar beneath the Plate. A ½ in. Pinion 10, positioned above the Disc, is loose on the Rod, while a ¾ in. Pinion 11 is fixed lower down the Rod, to be followed by a loose Short Coupling 12, held in position by a Collar. Note that the Rod passes through one transverse bore of the Coupling.

Also journalled in the Toothed Disc and Flat Plate 5 (in holes adjacent to those carrying Rod 9) as well as in a Double Bent Strip 13 bolted to the underside of Plate 5, is a 2½ in. Rod. This is secured by a ½ in. Pinion 14, above the Disc, and by a Collar, the latter beneath Double Bent Strip 13. Pinion 14 meshes with Pinion 10, while a Crank 15 is mounted on the lower end of the Rod.

A 3½ × ½ in. Double Angle Strip 16, to which two Cranks 17 are fixed, is now bolted between Flat Girders 2, as shown, then a 1½ in. Rod is fixed in the boss of each Crank. Free to turn on the Rod is a Coupling 18, held in place by a Collar, the Rod passing through one end transverse bore of the Coupling. Another 1½ in. Rod is held in the longitudinal bore of the Coupling, a free-running 4¼ in. Road Wheel being secured on this Rod, again by a Collar. Fixed in the outside end tapped bore of the Coupling is a 1 in. Screwed Rod 19 the opposite end of which is screwed into a Threaded Boss. The Threaded Bosses at each side are then pivotally connected by a 5½ in. compound strip 20, the securing Bolt in one case also securing a bent 4 in. compound Strip 21, obtained from two 2½ in. Strips. The free end of this Strip is lock-nutted to Crank 15.

At the other end of the undercarriage an axle, complete with differential, is built up and mounted in two 1 in. Corner Brackets 22, bolted one to each Flat Girder 6. This differential axle arrangement is more or less the standard Meccano construction often included in various models: A 4 in. Rod 23, carrying,

In this view of the model, below right, the top of the bodywork has been removed to show the construction of the gearbox. Bottom of page: In this close-up view, the construction of the differential is clearly shown.

in order, a Boiler End, a Collar, a $1\frac{1}{2}$ in. Contrate Wheel 24, three Washers and a $\frac{3}{4}$ in. Contrate Wheel 25, is inserted, loose, part way into the longitudinal bore of a Coupling. (Large Contrate 24 is free on the Rod while small Contrate 25 is fixed. The Collar will later also be fixed to help secure the differential.) Loosely inserted part way into the other end of the longitudinal bore of the same Coupling is a 3 in. Rod 26, this carrying a second Boiler End and a fixed $\frac{3}{4}$ in. Contrate Wheel which meshes with two $\frac{3}{4}$ in. Pinions 27, free on Pivot Bolts screwed into the centre tapped bores of the Coupling. A $1\frac{1}{2}$ in. Rod is fixed in the centre transverse smooth bore of the Coupling, and Collars fixed on opposite ends of this Rod are connected to Contrate 24 by 1 in. Screwed Rods 28.

The Boiler Ends are then joined by four 2 in. Strips, one of which, numbered 29 in the illustrations, is spaced from the Boiler Ends by two Washers on each securing Bolt. Attached to this Strip is a Double Bent Strip 30, the two Parts between them serving as the bearings for a 2 in. Rod held in place by a $\frac{1}{2}$ in. Pinion 31 and a Collar. Pinion 31 engages with Contrate 24. A $\frac{3}{4}$ in. Contrate 32 is fixed on the Rod, the free end of which is inserted into the longitudinal bore of Short Coupling 12. Contrate 32 engages with Pinion 11. Large Road Wheels are of course mounted on Rods 23 and 26.

Body and gearbox

Moving on now to the body, a base framework is built up from two $9\frac{1}{2}$ in. Angle Girders 33 joined by two $7\frac{1}{2}$ in. Angle Girders 34, the resulting rectangle being enclosed by two $5\frac{1}{2}$ x $2\frac{1}{2}$ in. Flat Plates 35, two $4\frac{1}{2} \times 2\frac{1}{2}$ in. Flat Plates 36 and two $5\frac{1}{2} \times 3\frac{1}{2}$ in. Flat Plates 37.

At this stage, while there is plenty of room available, the gearbox should be added. Two $7\frac{1}{2}$ in. Angle Girders 38, placed longitudinally, are bolted one through the fifth hole and one through the eleventh hole of front Angle Girder 34, also, of course, being bolted to the tops of the base Flat Plates. One 3 in. Angle Girder 39 and one $5\frac{1}{2}$ in. Angle Girder 40 are fixed to each Girder 38. then these two Girders are connected by a $4\frac{1}{2} \times 2\frac{1}{2}$ in. Flat Plate 41.

Journalled in Flat Plates 41 is a 4 in. Rod which carries, outside the Plates, a $2\frac{1}{2}$ in. Sprocket Wheel 42 and a 1 in. Gear 43, while a $\frac{3}{4} \times \frac{1}{2}$ in. Pinion 44 is mounted on the Rod inside the Plates. Gear 43 meshes with another 1 in. Gear on a $4\frac{1}{2}$ in. Rod 45, journalled in Plates 41 vertically below the 4 in. Rod. Mounted on Rod 45 are a $\frac{3}{4} \times \frac{3}{4}$ in. Pinion 46 and a $\frac{3}{4} \times \frac{1}{4}$ in. Pinion 47. The Rod, incidentally, is free to slide in its bearing, controlled by a $3\frac{1}{2}$ in. Strip 48, lock-nutted to one lug of a $1 \times \frac{1}{2}$ in. Double Bracket bolted to the base. A Bolt in the second hole of this Strip is screwed into one bore of a loose Collar held on Rod 45 by two other fixed Collars placed one each side. A Nut on the shank of the Bolt prevents it from fouling the Rod.

Rod 45 is flanked on one side by a second sliding $4\frac{1}{2}$ in. Rod 49, similarly controlled, and, on the other by a non-sliding $3\frac{1}{2}$ in. Rod 50. Mounted on Rod 49 are a $\frac{1}{2}$ in. Pinion 51 and a 50-teeth Gear, the latter in constant mesh with Pinion 46, while, a 50-teeth Gear 52 is also mounted on Rod 50 along with a Worm Gear 53.

Returning to Rod 42, this is flanked by two $4\frac{1}{2}$ in. Rods 54 and 55, one each side. Both Rods carry a 50-teeth Gear Wheel 56 and both are free to slide in their bearings, too much movement being prevented by a Collar on one end of each Rod and a 1 in. Pulley with Rubber Ring 57 on the other end. A Compression Spring is mounted on each Rod between the Collar and Plate 41, the action of the Spring on the rod thus forcing Pulley with Rubber Ring 57 against its respective Plate 41 to serve as a brake for the winding drum, Rods 54 and 55 later acting as the winding drums, one for the jib and one for the load hook. Movement of both Rods is controlled by levers similar to those already mentioned, although, of course, the positions of the locating Bolts in the $3\frac{1}{2}$ in. Strips are different.

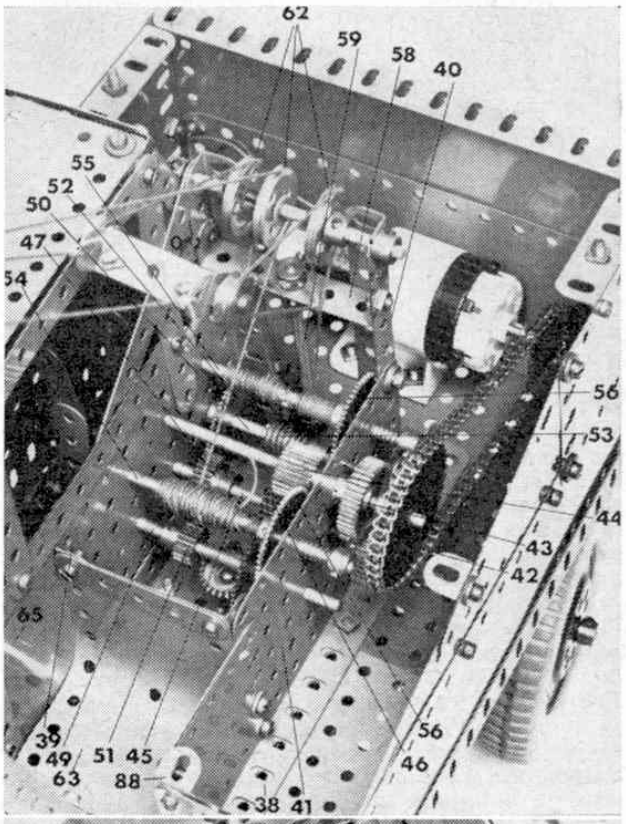

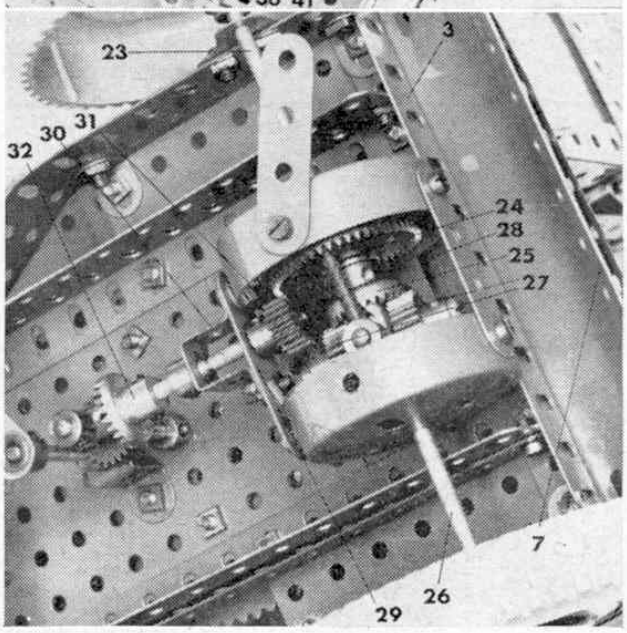

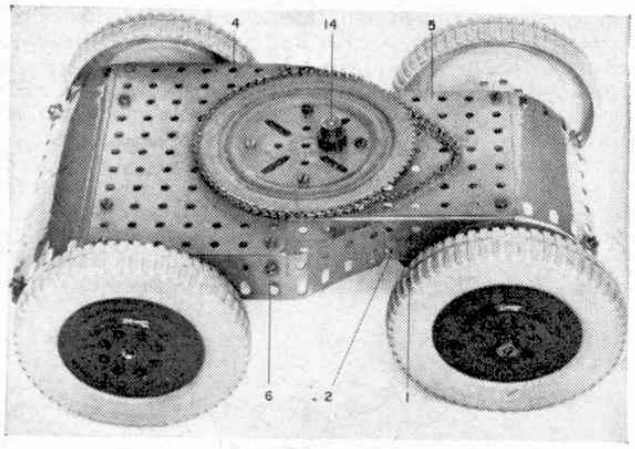

The undercarriage of the Crane as it appears when removed from the body of the model.

Angle Girders 40 at each side are now joined by a $2\frac{1}{2} \times \frac{1}{2}$ in. Double Angle Strip 58. Journalled in this and in the base Flat Plates is a $5\frac{1}{2}$ in. Rod carrying a $\frac{1}{2}$ in. Pinion, in constant mesh with Worm 53, and a $\frac{3}{4}$ in. Sprocket Wheel 60, the latter on the lower end of the Rod, which is held in place by Collars. A Power Drive Unit is then bolted to the base Flat Plates in the position shown, and a 1 in. Sprocket on its output shaft is connected by Chain to Sprocket 42. A lever controlling the motor switch is built up from a 3 in. Strip 61, lock-nutted to an Angle Bracket bolted to Girder 33. Lock-nutted, in turn, through the second hole of this Strip is a 7 in. compound strip, the other end of which is held by a Collar on an Adaptor for Screwed Rod. This is accordingly fixed by a Bolt to a $2\frac{1}{2}$ in. Strip lock-nutted to the long lug of a $1 \times \frac{1}{2}$ in. Angle Bracket bolted to the base. A Slide Piece fixed through the second hole from the top of this $2\frac{1}{2}$ in. Strip fits over the motor switch.

Next, a bracing $5\frac{1}{2}$ in. Strip is fixed between each Flat Plate 41 and corresponding Angle Girder 40, being attached to the latter by a $3\frac{1}{2}$ in. Rod carrying three 1 in. loose Pulleys 62 and held in place by Collars. The front of the gearbox is then enclosed by a shaped $4\frac{1}{2} \times 2\frac{1}{2}$ in. Plastic Plate 63 edged at the top by a $2\frac{1}{2}$ in. Strip and bolted to Angle Girders 39. At the bottom, the Plate is bolted to front Girder 34, the securing Bolts also fixing a $2\frac{1}{2} \times \frac{1}{2}$ in. Double Angle Strip 64 to the Girder, although the latter are spaced apart by two Washers on the shank of each Bolt.

PARTS REQUIRED

8—1a	1—16b	4—52a	1—151
5—2	6—18a	4—53a	2—155
6—2a	2—22	1—55a	1—168
9—3	5—22a	34—59	1—173a
4—4	2—23	4—62	1—180
12—5	4—25	1—62b	1—185
4—6	1—25a	3—63	4—187b
3—6a	1—25b	2—64	4—188
2—8a	6—26	2—70	2—190
7—8b	4—27	38—72	4—190a
3—9	1—28	4—82	3—191
2—9a	4—29	4—90a	1—192
2—9b	2—21	1—94	1—193a
2—9c	1—32	1—95	1—193b
2—9d	49—37	1—96	1—194c
4—11	207—37a	1—96a	4—195
2—11a	180—37b	2—103	1—196
25—12	9—38	2—103k	2—224
1—12b	3—45	6—111a	1—226
1—14	4—48	4—111c	4—235
6—15a	5—48a	2—120	6—235a
2—15b	2—48b	2—120b	13—235b
3—16	1—48d	2—133a	2—235d
1—16a	1—50		

1—Power Drive Motor

Body

Having now completed the gearbox, the body can be dealt with. The inner of the cab sides consists of existing Flat Plate 41 extended forward by a $3\frac{1}{2} \times 2\frac{1}{2}$ in. Flexible Plate 65 bolted to a $3\frac{1}{2}$ in. Girder 66 fixed to front Girder 34. Bolted to the top of Girder 66 is a $5\frac{1}{2}$ in. Strip to which, in turn, are bolted a $3\frac{1}{2}$ in. Narrow Strip 67, a $3\frac{1}{2}$ in. Strip 68 and a $4\frac{1}{2}$ in. Strip 69. Another $4\frac{1}{2}$ in. Strip is used to connect the tops of Strips 68 and 69, at the same time fixing two Angle Brackets 70 and two $2\frac{1}{2} \times \frac{1}{2}$ in. Double Angle Strips in place. The cab roof will later be attached to these Double Angle Strips.

Turning to the outer side of the cab, one $3\frac{1}{2}$ in. Angle Girder 71 and one $4\frac{1}{2}$ in. Angle Girder 72, along with two $6\frac{1}{2}$ in. compound strips 73 and 74, are fixed to Angle Girder 33 in the positions shown. Compound strip 73 consists of a $5\frac{1}{2}$ in. Strip extended by a $3\frac{1}{2}$ in. Strip, while compound strip 74 is a $5\frac{1}{2}$ in. Strip extended by a $2\frac{1}{2}$ in. Strip. The tops of the two compound strips are connected by a $4\frac{1}{2}$ in. Strip 75, while Strip 74 is connected to Girder 72 by a second $4\frac{1}{2}$ in. Strip. Strip 73 is connected to Girder 71 by a $1\frac{1}{2}$ in. Strip. In the first case, the intervening space is enclosed by two $4\frac{1}{2} \times 2\frac{1}{2}$ in. Flexible Plates 76, whereas, in the latter case, two $2\frac{1}{2} \times 1\frac{1}{2}$ in. Flexible Plates 77, suitably overlapped, are used. A $3\frac{1}{2}$ in. Narrow Strip 78 and a $2\frac{1}{2}$ in. Narrow Strip 79 are added, as shown, to both sides of the cab to round-off the structure.

A door is produced from two $5\frac{1}{2}$ in. Strips 80 joined by three $3\frac{1}{2}$ in. Strips, the resulting space being covered by a $3\frac{1}{2} \times 2\frac{1}{2}$ in. Transparent Plastic Plate and a $3\frac{1}{2} \times 3\frac{1}{2}$ in. compound flexible plate 81, built up from two $3\frac{1}{2} \times 2\frac{1}{2}$ in. Flexible Plates. The door is attached to compound strip 74 by Hinges, a doorcatch 82 being supplied by a Handrail Support in which a 1 in. Rod is fixed. A Fishplate is held by Nuts on the shank of the Handrail Support.

At the front of the cab, Girders 66 and 71 are joined by a $3\frac{1}{2}$ in. Strip and a $3\frac{1}{2} \times 2\frac{1}{2}$ in. Flexible Plate 83, extended by a $3\frac{1}{2} \times 2\frac{1}{2}$ in. Transparent Plastic Plate, the latter edged by a $2\frac{1}{2}$ in. Strip 84, bolted to front Angle Brackets 70. Attached to rear Angle Brackets 70 and to a $2\frac{1}{2} \times \frac{1}{2}$ in. Double Angle Strip bolted between Girder 40 and the $4\frac{1}{2}$ in. Strip joining Parts numbered 74 and 75, is a $2\frac{1}{2} \times 2\frac{1}{2}$ in. Transparent Plastic Plate, edged at the top and bottom by $2\frac{1}{2}$ in. Strips. The cab roof is supplied by a $4\frac{1}{2} \times 2\frac{1}{2}$ in. Flexible Plate bolted to the Double Angle Strips used to connect the tops of Strips 68 and 69 at each side.

At the other side of the gearbox, Flat Plate 41 is extended forward by a $2\frac{1}{2} \times 2\frac{1}{2}$ in. Flexible Plate 85, edged by a $2\frac{1}{2}$ in. Strip 86 and bolted to a $2\frac{1}{2}$ in. Angle Girder fixed to front Girder 34. Another $2\frac{1}{2}$ in. Angle Girder 87 is fixed to Girders 33 and 34, then the two are joined by a $2\frac{1}{2} \times 2\frac{1}{2}$ in. Flexible Plate edged by $2\frac{1}{2}$ in. Strips, the Bolts securing the top Strip also holding two Obtuse Angle Brackets 88 in place. A $4\frac{1}{2}$ in. Angle Girder 89 is bolted to the rearmost end of Girder 33, then the side is filled in with a $9\frac{1}{2} \times 2\frac{1}{2}$ in. Strip Plate 90, a $3\frac{1}{2} \times 2\frac{1}{2}$ in. Flexible Plate 91 and two $3\frac{1}{2} \times 2\frac{1}{2}$ in. Triangular Flexible Plates. A 2 in. Angle Girder is bolted to Plate 91, which is also attached to appropriate Angle Girder 40 by a $2\frac{1}{2} \times \frac{1}{2}$ in. Double Angle Strip. Bolted to this Double Angle Strip and to Obtuse Angle Brackets 88 is a $7\frac{1}{2} \times 2\frac{1}{2}$ in.

Strip Plate 92, while another $7\frac{1}{2} \times 2\frac{1}{2}$ in. Strip Plate is bolted between the 2 in. Angle Girder and another similar Angle Girder secured to upper Plate 76.

At the back, a $7\frac{1}{2}$ in. Angle Girder 93 is bolted between the tops of Girders 89 and 72, the resulting space being enclosed by two $7\frac{1}{2} \times 2\frac{1}{2}$ in. Strip Plates 94.

Before the body is fixed on the undercarriage, a Steering Wheel is mounted on a 4 in. Rod 95, journalled in the appropriate Flat Plate 36 and in a Double Bent Strip bolted to the top of the Plate. It is held in place by a Collar above the Double Bent Strip and a Crank 96 beneath the Plate.

Now fixed by four Double Brackets to the underside of Flat Plates 37 is a Ball Thrust Race Flanged Disc 97. Journalled in this Disc and the appropriate Flat Plate is a $1\frac{1}{2}$ in. Rod held in place by a $\frac{1}{2}$ in. Pinion 98 beneath the Disc and by a Double Arm Crank above it. A $3\frac{1}{2}$ in. Narrow Strip is lock-nutted to one arm of this Crank and also to the arm of Crank 96, then the completed body is mounted on the undercarriage by passing Rod 9 up through the centre hole of Flanged Disc 97 and through the Flat Plate, after which it is secured by a Collar above the Plate. Of course, a Ball Cage is first added between the two Flanged Discs to complete the Ball Thrust Race. A length of Sprocket Chain is passed round Sprocket Wheel 60 and round the Ball Thrust Race Toothed Disc. A $\frac{3}{4}$ in. Contrate Wheel is fixed on the upper end of Rod 9 to engage with Pinion 51, thus completing the drive linkage to the undercarriage road wheels.

With the body in position, Pinion 98 should engage with Pinion 10 which in turn meshes with Pinion 14 to complete the steering linkage.

All that now remains to be built is the jib which consists of two identical "sides," each built up from two $17\frac{1}{2}$ in. compound strips 99 and 100 braced by various Narrow Strips, as shown. Each compound strip is made up from two $9\frac{1}{2}$ in. Strips overlapped two holes, the compound strips, themselves, being joined at their upper ends by a 2 in. Strip, at the same time fixing a $3\frac{1}{2}$ in. Strip 101 and a 3 in. Strip 102 in place. A $2\frac{1}{2} \times 1\frac{1}{2}$ in. Flexible Plate 103 is added, then the sides are connected, at their upper ends by two $1\frac{1}{2} \times \frac{1}{2}$ in. Double Angle Strips 104 and, approximately half-way down, by two 2 in. Strips 105, attached by Angle Brackets. Strips 102 and 103 are brought together and in their end holes is journalled a $1\frac{1}{2}$ in. Rod carrying two 1 in. loose Pulleys 106 and held in place by Collars. The completed jib is then attached to the lugs of Double Angle Strip 64 by a $3\frac{1}{2}$ in. Rod also held by Collars.

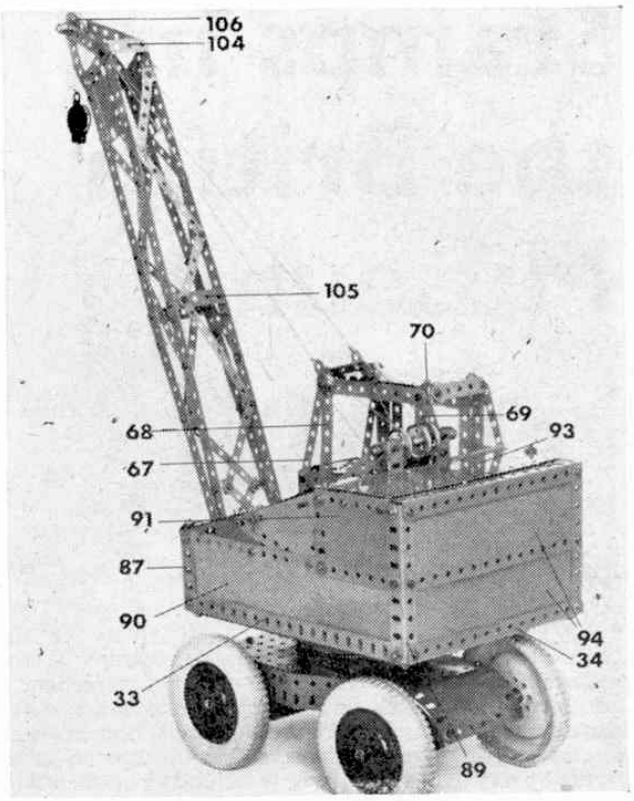

We come now to the control cords, although, first, an intermediate pulley system for the jib is built up from two $1\frac{1}{2} \times \frac{1}{2}$ in. Double Angle Strips, joined together, with two $\frac{1}{2}$ in. loose Pulleys 107 being mounted on $\frac{3}{8}$ in. Bolts held by Nuts in the lugs of one of the Strips. Two equal lengths of Cord are tied to the lugs of the remaining Strip, their other ends being tied to points near the top of the jib. A further two equal lengths of Cord are tied to Double Angle Strip 58, are passed round Pulleys 107, and are brought back and over the two outside Pulleys 62 to be finally wound on Rod 55. A final length of Cord is tied to the lug of a Single Pulley Block 108, is taken over one Pulley 106, is brought down and around the Pulley in the Block and is then taken up and over remaining Pulley 106. From there it is taken down and around centre Pulley 62 to be wound on Rod 54, thus completing the model.

Below: An underside view of the body when removed from the undercarriage. Note that, when the body is in place, Pinion 11 is situated beneath the undercarriage. At right: An underside view of the model showing the steering linkage and drive to the road wheels.

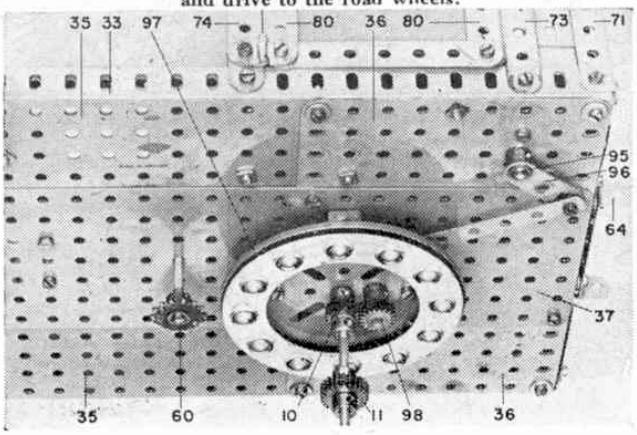

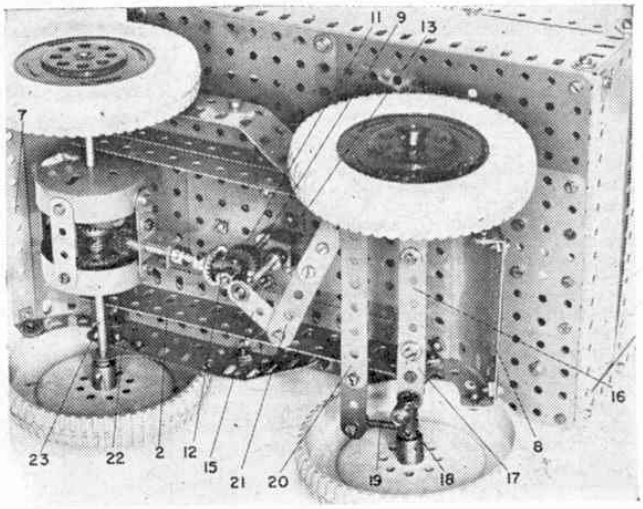

SOME USEFUL MECHANISMS FOR MECCANO MODELS

AS LONG as a Meccano model-builder occupies himself merely by building the hundreds of models shown in the Instructions Books the work of construction is delightfully simple and easy and no undue brain work is necessary. However, no keen Meccano boy, or girl for that matter, is content to build only the models described and illustrated in the Instruction Books. Sooner or later he desires to branch out into inventing and constructing models based on his own ideas and, with this in mind, we have designed many different kinds of mechanisms especially so that they may be applied to more than one type of model – in many cases without any alteration from our standard pattern – although in some few instances slight modifications may be required. Those boys who like designing and inventing their own models will find these movements very helpful especially as they appear from time to time in Meccano Magazine models.

One of the most popular subjects for Meccano models is the wide range of cranes and the first of the mechanisms we are describing is a useful Automatic Grab device that can be fitted to several different kinds of cranes of the larger type. It is what is known as a single suspension grab and it is shown in Figs. 1 and 2. The grabbing mechanism is very efficient and an important feature is that the trip device that operates the grab is remarkably easy to adjust.

The jaws of the grab are made by bolting $2\frac{1}{2}$ x $1\frac{1}{2}$ in. Triangular Flexible Plates to the flanges of $2\frac{1}{2}$ x $1\frac{1}{2}$ in. Flanged Plates, the Triangular Flexible Plates being strengthened by $2\frac{1}{2}$ in. Strips and $2\frac{1}{2}$ in. Curved Strips joined at their upper ends by Fishplates. A 1 in. Triangular Plate 1 is lock-nutted to the jaws on each side and a $2\frac{1}{2}$ x $\frac{1}{2}$ in. Double Angle Strip 2 is bolted between the upper ends of the Curved Strips. A $1\frac{11}{16}$ in. radius Curved Plate is clamped between this Double Angle Strip and a $1\frac{1}{2}$ x $\frac{1}{2}$ in. Double Angle Strip 3, the lower corners of the Curved Plate being connected to the Flanged Plate by Angle Brackets.

A Coupling is fixed by a Nut on a $\frac{3}{4}$ in. Bolt passed through each Triangular Plate 1, the two Couplings then being connected by a 2 in. Rod. Each Coupling supports a $4\frac{1}{2}$ in. Rod 4, on which another Coupling 5 is free to slide. Couplings 5 are connected by two $2\frac{1}{2}$ in. Rods, each of which carries a further Coupling 6, placed centrally on the Rod. Four $2\frac{1}{2}$ in. Strips are passed over the ends of the $2\frac{1}{2}$ in. Rods and over 2 in. Rods supported in Double Angle Strips 3, to be held on the Rods by Spring Clips.

Each Rod 4 carries at its upper end a Handrail Coupling in which a Pivot Bolt is free to turn. A 2 in. Strip 7 is placed on the Pivot Bolt along

with a 1 in. Corner Bracket that is bolted to one end of the Strip. The Pivot Bolt is then fixed by its Nuts in a Double Bracket 8. A Pawl without boss is attached to each Corner Bracket by a $\frac{1}{2}$ in. Bolt, but is spaced from it by five Washers on the shank of the Bolt.

A $4\frac{1}{2}$ in. Rod 9 is now passed through Double Bracket 8 and a $\frac{1}{2}$ in. Pulley 10 is fixed on the Rod. The Rod is then passed through Coupling 6 and a Collar 11 is fixed on its lower end. An End Bearing placed at the upper end of Rod 9 serves to attach the grab to the crane hook.

In addition to the grab a suspender or trigger ring is required. This can take any convenient form, such as a Cylinder or a ring of Curved Strips, and it should be suspended from the crane jib at the height at which it is required to discharge the grab. The hoisting Cord should pass freely through the centre of the ring, which should be weighted sufficiently to depress the Strips 7 of the grap when these engage the ring as the grab is raised.

The sequence of operations is as follows: assuming the grab to be on the ground with the jaws open (Fig. 2), when the hoisting Cord is raised, Pulley 10 engages the Pawls, which lift Rods 4 and thus close the jaws. The grab can now be lifted, until the Strips 7 engage the suspender ring and, as the Strips are depressed, they move the Pawls clear of Pulley 10. The Rods 4 are then released and the jaws open to discharge the contents of the grab.

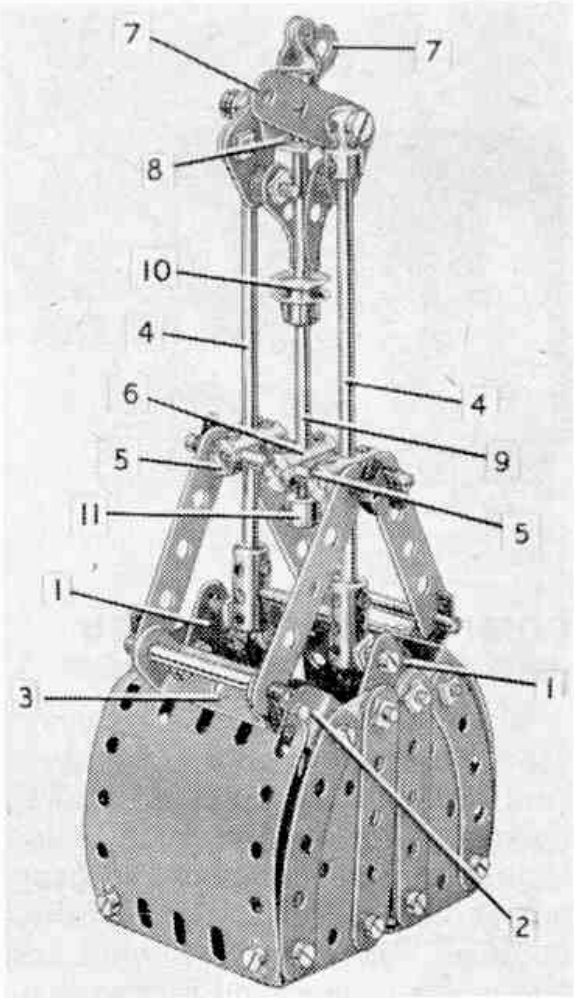

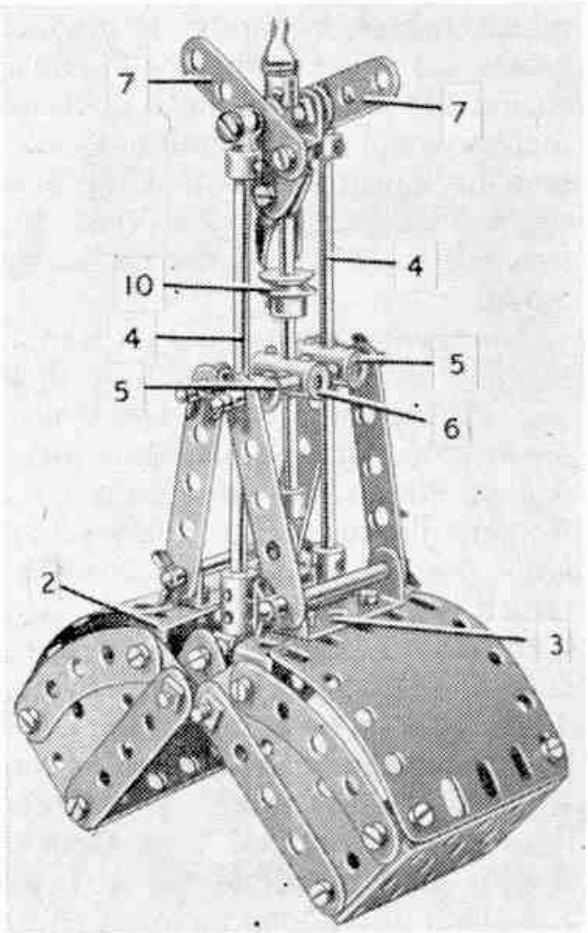

Top, fig. 1: a particularly useful mechanism for advanced crane-model builders is this Single Suspension Grab fitted with an automatic discharge unit. Right, fig. 2: another view of the grab in the open position. Note the change in the automatic discharge unit.

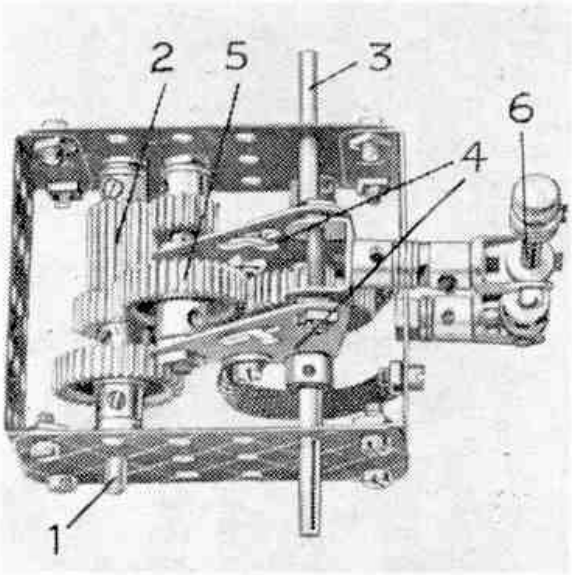

Fig. 3: this compact Three-speed and Reverse Gearbox has the advantages over the more usual types of silent gear-change at any speed and less wear on the teeth of the component gears.

COMPACT THREE-SPEED AND REVERSE GEAR-BOX

Many kinds of models require a variable-speed gearbox of some kind and model-builders finding themselves in need of such a unit should consider whether the gearbox shown in Fig. 3 will meet their purpose. This gives 3-forward and one reverse speed and it is particularly interesting for its compactness which makes it handy in models where space is confined. A suitable casing for the mechanism, such as that shown in the illustration, should first be constructed, making any slight modifications that may be required to fit it into the particular model.

The driving shaft is a 3 in. Rod 1 that carries a $\frac{1}{2}$ x $\frac{3}{4}$ in. Pinion 2, a $\frac{3}{4}$ in. Pinion and a 1 in. Gear, which are fixed to it in the positions shown. A $\frac{1}{2}$ in. Pinion is pivoted on a $\frac{3}{4}$ in. Bolt fixed to the casing, and meshes with the Pinion 2. The layshaft, which is also the driven shaft, is a 4 in. Rod 3, and it carries a 1 in. Gear and two $1\frac{1}{2}$ in. Corner Brackets 4 spaced from each side of the Gear by Washers and held in place on the Rod by two Collars. This Gear meshes with another 1 in. Gear 5 that is free to rotate on a 1 in. Screwed Rod held in Corner Brackets. Two Springs bolted to the Corner Brackets pass around Rod 3 and are then attached to the gearbox casing.

Corner Brackets 4 are also attached to a 1 in. Screwed Rod on which is mounted a Large Fork Piece that is lock-nutted by means of a $1\frac{1}{4}$ in. Bolt and Nuts to the boss of a Swivel Bearing. The Swivel Bearing is attached to the gear selector Rod 6, the lower end of which is inserted in a Universal Coupling fixed to the casing by a Threaded Pin.

To engage a particular gear train the selector Rod 6 is first moved to the right, as seen in the photograph thus releasing gear 5 from engagement. For a lower gear or for reverse ratio the selector is then moved away from the operator, while, for a higher gear ratio, it is pulled towards him.

The drive may be transmitted from the driven shaft 3, to the model in which the mechanism is incorporated by meshing a $\frac{1}{2}$ x $\frac{3}{4}$ in. Pinion, mounted on the Rod with a similar Pinion fixed on a Rod journalled at one of its ends in the gearbox casing.

The advantages of this type of gearbox over the usual kinds are that the gear changing is silent while working at any speed, and there is less wear of the teeth of the gears than in the more conventional types where the gears are slid into mesh while rotating.

DIFFERENTIAL MECHANISM FOR A MODEL CAR

Another useful mechanism – shown in Fig. 4 – is a Differential designed for use in a model car or lorry where the usual shaft drive has

been dispensed with and Sprocket Chain substituted.

To construct it, a 2 in. Sprocket Wheel 1 is secured to a Bush Wheel 2 by means of two $1\frac{1}{2} \times \frac{1}{2}$ in. Double Angle Strips, each of the four Bolts fixing these carrying two Washers for spacing purposes. A Rod of sufficient length to reach one of the road wheels is now passed through the boss of the Sprocket Wheel and fitted with a $\frac{3}{4}$ in. Contrate Wheel 3. Sufficient length of the Rod is left projecting in order to allow it to pass into the longitudinal bore of a Coupling 4, then a second Rod, passing through the Bush Wheel, is fitted with a $\frac{3}{4}$ in. Contrate Wheel 5 and inserted in the other end of the Coupling.

The transverse bore of the Coupling is fitted with a 2 in. Rod that is secured in place by a Grub Screw. This Rod forms a bearing for two $\frac{3}{4}$ in. Pinions 6 that are each spaced away from the Coupling by means of two Washers, so that the Pinions fit snugly against the Double Angle Strips forming the frame of the mechanism. The rear road wheels of the car or lorry are fitted on to the ends of the Rods journalled in Bush Wheel 2 and Sprocket Wheel 1 respectively and, when installed in the model, the drive from the Electric Motor or other power unit is taken by Sprocket Chain to 2 in. Sprocket 1.

The purpose of the differential mechanism is to allow the inner of the two rear wheels of the vehicle when turning a corner, to rotate more slowly than the outer wheel while still allowing the drive to be transmitted to both wheels.

A MECHANISM FOR CRANE BUILDERS

For use in model cranes of the larger and more ambitious types and in certain other kinds of models where a drive of different speeds and capable of being reversed is required, we have designed the comparatively simple but efficient mechanism shown in Fig. 5. This

Fig. 4: a mechanism that can be fitted to many models is this simple but highly effective Differential designed to be driven by Sprocket Chain instead of the usual shaft drive.

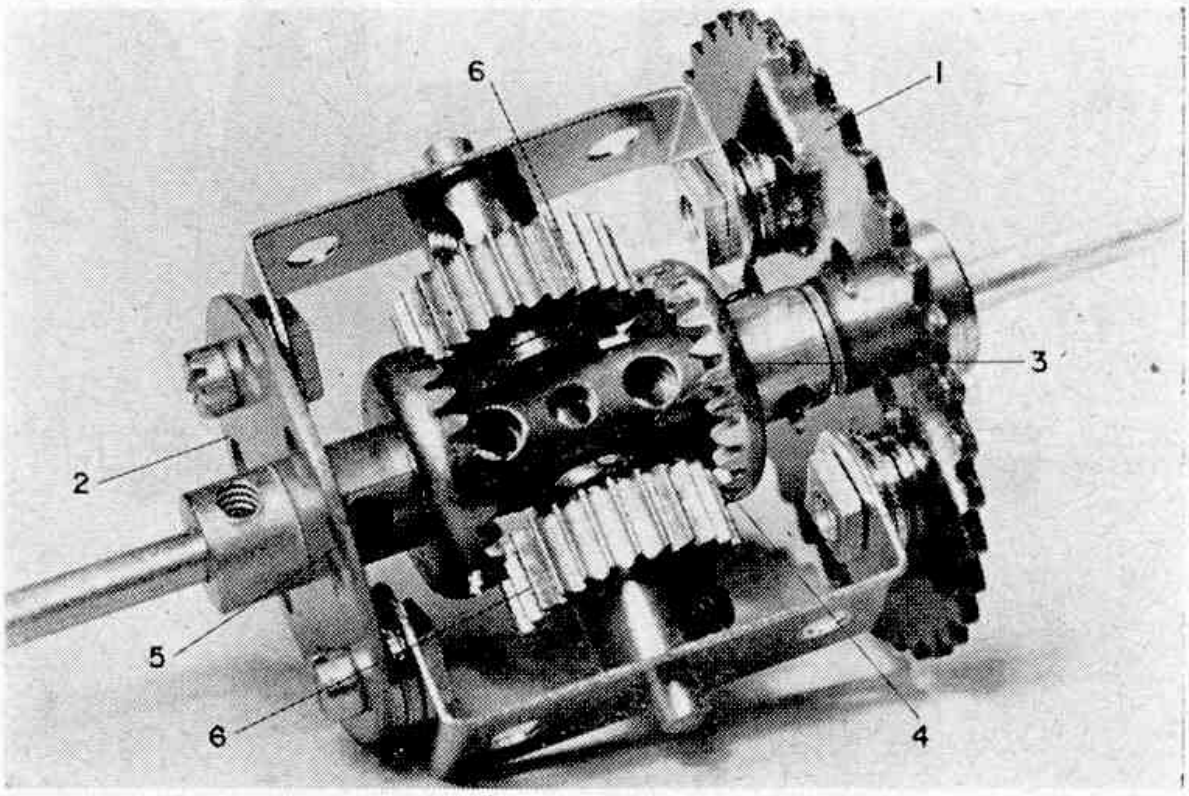

does not require many parts and the framework in which it is housed can of course be modified as required to enable it to be fitted into a particular model. The mechanism is designed to give a slow speed in one direction and a rapid speed in reverse, and either Rod 5 or Rod 8 may be used as the driving or input shaft.

Rod 8 is capable of sliding in its bearings and is controlled by a suitable hand lever 12. This Rod carries two Contrate Wheels 9 and 10, which are $\frac{3}{4}$ in. and $1\frac{1}{2}$ in. in diameter respectively, and on operation of the lever 12 one of them is brought into engagement with one of two $\frac{1}{2}$ in. Pinions secured to the Rod 5. Hence if the Rod 8 is used as the driving shaft and the large Contrate Wheel is thrown into gear with its respective $\frac{1}{2}$ in. Pinion, the Rod 5 is driven nearly 3 times as fast as the Rod 8. This is because the gear ratio between a $\frac{1}{2}$ in. Pinion and a $1\frac{1}{2}$ in. Contrate Wheel is approximately $2\frac{2}{3}$:1.

Alternatively, if the small Contrate Wheel 9 is thrown into engagement, the Rod 5 revolves only a little faster than the driving Rod, the approximate ratio between the two being $1\frac{1}{3}$:1.

If the sliding Rod 8 is required to remain in constant gear with toothed wheels on a further driving Rod, this can be arranged by placing $\frac{1}{2}$ in. Pinions end to end on the Rod 8, making sure that the teeth of the two Pinions line up accurately with each other. These Pinions act as a single toothed unit that may be engaged by a Gear Wheel on the further driving shaft, and the extra width provided by the butted Pinions allows for the longitudinal sliding movement.

Alternatively if a $\frac{1}{2}$ x $\frac{3}{4}$ in. Pinion is available this may be used in place of the two separate $\frac{1}{2}$ in. Pinions.

Fig. 5: a mechanism that is of particular use to crane builders is this Two-speed Reverse Gearbox in which either shaft 5 or shaft 8 will serve as the input or output shaft, as required.

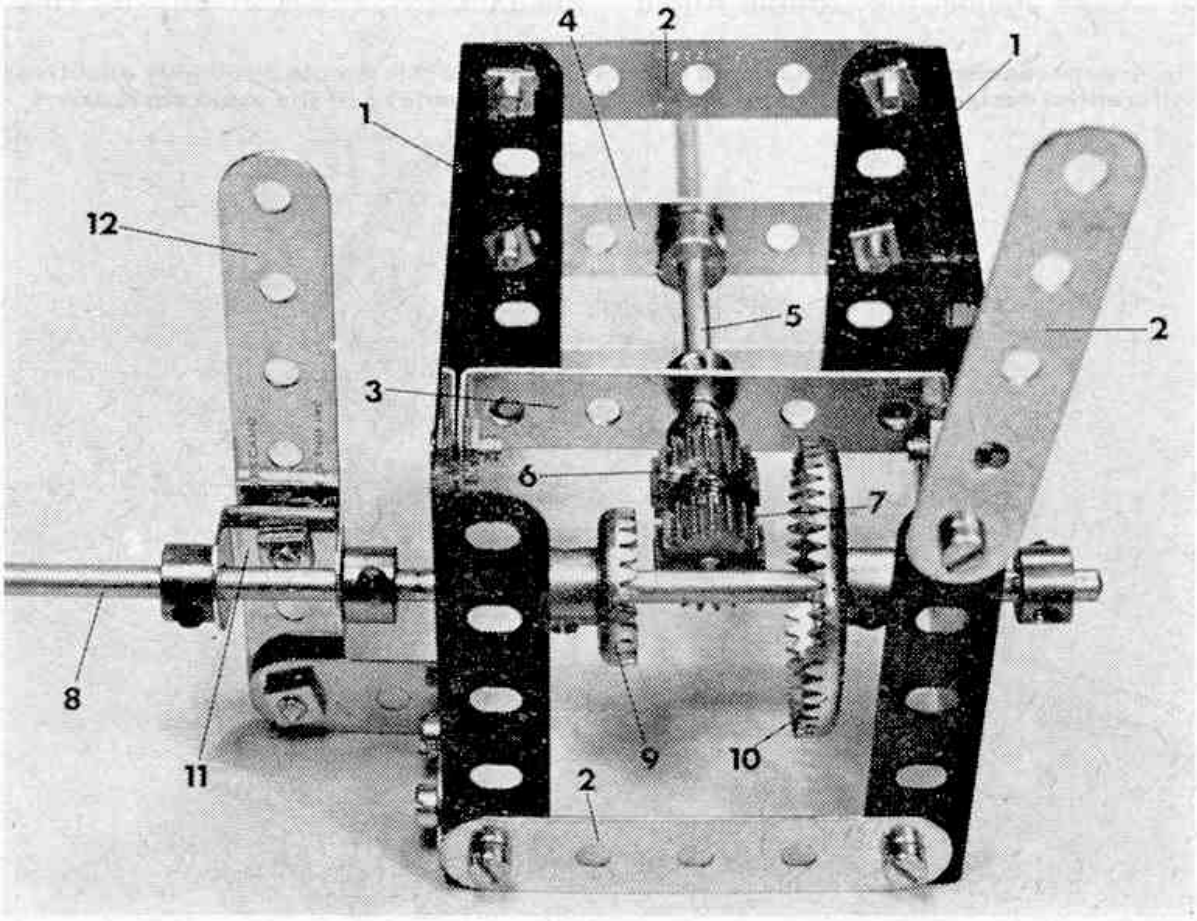

Strips 28, overlapped 3 holes, to the ends of which two 1 in. Pulleys are fixed to represent headlamps. Semi-circular Plate 26 is extended by a 2½ × 2½ in. Flexible Plate 29, shaped as shown to cover the front axle assembly. Held by Nuts in the centre of this Plate is a ½ in. Bolt on which two Obtuse Angle Brackets and an ordinary Angle Bracket 30 are held as can be seen in the illustration. Two Worms are fixed to the Obtuse Angle Brackets to give an indication of the distinctive engine cylinders present on the actual vehicle.

Finally, two Formed Slotted Strips 31 are bolted through the unused holes in the flanges of Flanged Plate 2 and are shaped over the front of the bonnet as shown. Plastic Plate 21 is connected to Flexible Plate 24 at each side by a 2½ in. Stepped Curved Strip 32 extended by a Fishplate.

PARTS REQUIRED

6—2	1—19s	1—51	2—189
2—3	2—22	3—90a	1—190
6—5	1—23	1—111a	1—191
7—10	2—32	5—111c	1—193
2—11	6—35	2—125	1—194c
1—11a	70—37a	1—126a	1—213
7—12	58—37b	1—186a	1—214
8—12c	7—38	3—187	3—215
2—17	1—48	2—188	1—Magic Motor
2—18a	3—48a		

Our second model is easily recognisable as a sports care similar to the pre- and early post-war M.G.'s To build it, two chassis members 1 are each built up from two 5½ in. Strips joined by a 3½ in. Strip to result in a 12½ in. compound strip, then the members are joined by two 2½ × ½ in. Double Angle Strips 2 and 3, a 2½ × 2½ in. Flexible Plate 4, attached by Angle Brackets, and a 2½ in. Strip 5 attached by Double Brackets 6. Fixed to the right-hand chassis member, in the positions shown, are a 2½ × 1½ in. Triangular Flexible Plate, a 2½ × 2½ in. Flexible Plate 7 and a 5½ × 1½ in. Flexible Plate 8, the last attached at one point only by means of a Fishplate as at 9.

In the case of the left-hand chassis member, this also carries a 2½ × 1½ in. Triangular Flexible Plate 10 and a 2½ × 2½ in. Flexible Plate 11, but, unlike the other side, these are "butt-jointed" by a 2½ × 1½ in. Flexible Plate. A 5½ × 1½ in. Flexible Plate 12 corresponding with Plate 8, is included but on this occasion is extended 2 holes rearward by a second 2½ × 1½ in. Flexible Plate 13.

The upper rear corners of Plates 7 and 11 are now connected by a 2½ × ½ in. Double Angle Strip 14 to which a 2½ × 1½ in. Flexible Plate 15 is bolted, the securing Bolts also fixing two Obtuse Angle Brackets in place. Attached to these Obtuse Angle Brackets is a further, shaped, 2½ × 1½ in. Flexible Plate 16 extended by a 2½ × 1½ in. Plastic Plate. Also bolted between Plates 7 and 11 is a 2½ × 1½ in. Flanged Plate 17 and another 2½ × ½ in. Double Angle Strip to which a 2½ in. Strip 18 is attached by a Fishplate, these three parts between them providing the seat.

A Flanged Sector Plate 19 is now bolted to the upper front corners of Flexible Plates 8 and 12, the securing Bolts also holding Angle Brackets in place. The Flanged Sector Plate is angled upwards and attached to the rear corners of Plates 8 and 12 by Fishplates, then a Flat Trunnion overlaid by a 2½ in. Strip 20 is fixed to the Angle Brackets at the front. Bolted to the Flat Trunnion is an ordinary Trunnion 21 to the lower flange of which a second Trunnion 22 is attached, the securing Bolt also serving to fix both Trunnions to Double Angle Strip 2. The front bumper is represented by a shaped 4½ in. Strip 23 attached to Trunnion 22, while 1 in. Pulleys are fixed to the ends of Strip 20 to act as headlamps.

Next, another 2½ × ½ in. Double Angle Strip is bolted between the flanges of Sector Plate 19 and, to this, is fixed a Reversed Angle Bracket 24 and a 2½ × 1½ in. Transparent Plastic Plate, the latter representing the windscreen. An 8-hole Bush Wheel 25 is attached to the free lug of the Reversed Angle Bracket to act as the steering wheel. The hood is built up from a 2½ × 2½ in. Curved Plate 26 and a 2½ × 2½ in. Flexible Plate 27 bolted to a 2½ × ½ in. Double Angle Strip which is then attached to Plates 7 and 11 by 2½ in. Stepped Curved Strips 28.

Two sets of combined mudguards and running board are each produced from a 5½ in. Strip 29 attached by an Obtuse Angle Bracket to a 3 in. compound strip 30, obtained from two 2½ in. Strips which is in turn attached by an Angle Bracket to two Formed Slotted Strips 31. The whole thing is attached to the appropriate chassis member by Angle Brackets. The wheels themselves are 2½ in. Road Wheels fixed on 3½ in. Rods journalled in the chassis members.

The model is completed by the addition of (a) a rear light, represented by a ½ in. Pulley 32, attached by an Obtuse Angle Bracket to the right-hand rear mudguard; (b) by an imitation gear lever supplied by a 1½ in. Rod 33 held in a Rod and Strip Connector bolted to an Angle Bracket fixed to Flexible Plate 7; (c) by a "mascot" 34 supplied by three Washers on a ⅜ in. Bolt fixed in Flanged Sector Plate 19; and (d) by a 1½ in. Rod 35 held in a right-angled Rod and Strip Connector bolted to Flexible Plate 11.

PARTS REQUIRED

6—2	1—18b	1—54	2—189
2—3	2—22	2—90a	4—190
9—5	1—23	5—111c	1—193
5—10	1—24	1—125	1—194
2—11	82—37a	2—126	1—200
12—12	80—37b	1—126a	1—212
5—12c	6—38	4—187	1—212a
4—16	6—48a	4—188	4—215
1—18a	1—51		

BATTLE *(continued from page 642)*

an enemy rumbling into sight, was able to draw an immediate bead on him and slam a shell forthwith into his vitals. Tank battles *did* go on for longish periods, and our desire to achieve some sort of realism closely coincides with the desire to ensure that the battle we are engaged in is not over in a matter of a few minutes.

It will be seen that some of the lighter weapons have no strike value at long range—this is correct, their muzzle velocities being pretty low and their effectiveness at anything above medium range being pretty feeble.

The range of some of the most powerful guns extends as we have already seen up to the equivalent of 2000 yards, or 60 in. This is not included in the Table, for the simple reason that visibility will be found to be rarely sufficient for efficient firing at this range to be carried out, particularly where the country is 'close' or wooded and hilly.

Finally, the result of the shot did depend on a couple of obvious conditions—whether it struck the target at which it was aimed, and if indeed the target itself was visible. These points will be our main concern in Part IX.

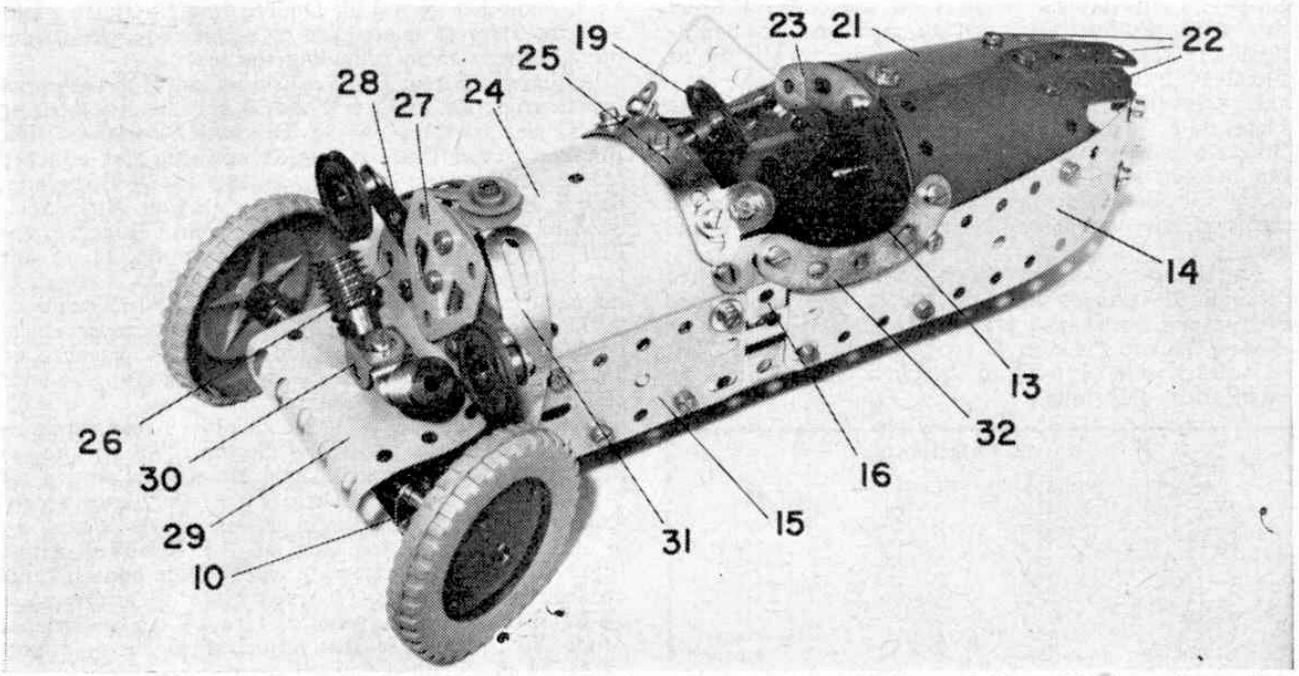

Double Angle Strips 17 and 18. A Fishplate is bolted through the second hole from the right of Double Angle Strip 17, the circular hole in the Fishplate, along with the corresponding hole in Double Angle Strip 18 providing the bearing for a $3\frac{1}{2}$ in. Crank Handle which acts as the steering column. The handle section of this Crank locates between the Angle Brackets held by Bolt 12, while a 1 in. Pulley 19 is fixed on the opposite end of the Crank Handle to serve as the steering wheel.

At the rear of the car, Plates 14 are joined by four Obtuse Angle Brackets 20 arranged in pairs, then the back is completed by a $4\frac{1}{2} \times 2\frac{1}{2}$ in. Plastic Plate 21 extended rearwards by three $2\frac{1}{2}$ in. Strips 22, positioned as shown. A $2\frac{1}{2}$ in. Stepped Curved Strip 23 is attached to the front edge of the Plate by an Angle Bracket.

The bonnet is represented by a $4\frac{1}{2} \times 2\frac{1}{2}$ in. Flexible Plate 24 to which a Formed Slotted Strip 25 is bolted, the end securing Bolts also fixing two Obtuse Angle Brackets in place. A $2\frac{1}{2} \times 1\frac{1}{2}$ in. Transparent Plastic Plate is attached to these Brackets to serve as the windscreen. Attached to the front of Plate 24 is a $\frac{1}{2}$ in. Pulley without boss, the securing Bolt also holding an Angle Bracket to which a Semi-circular Plate 26 and a Flat Trunnion 27 are bolted, the Trunnion being spaced from the Plate by a Washer. Bolted in place between the Trunnion and the Plate are two $2\frac{1}{2}$ in.

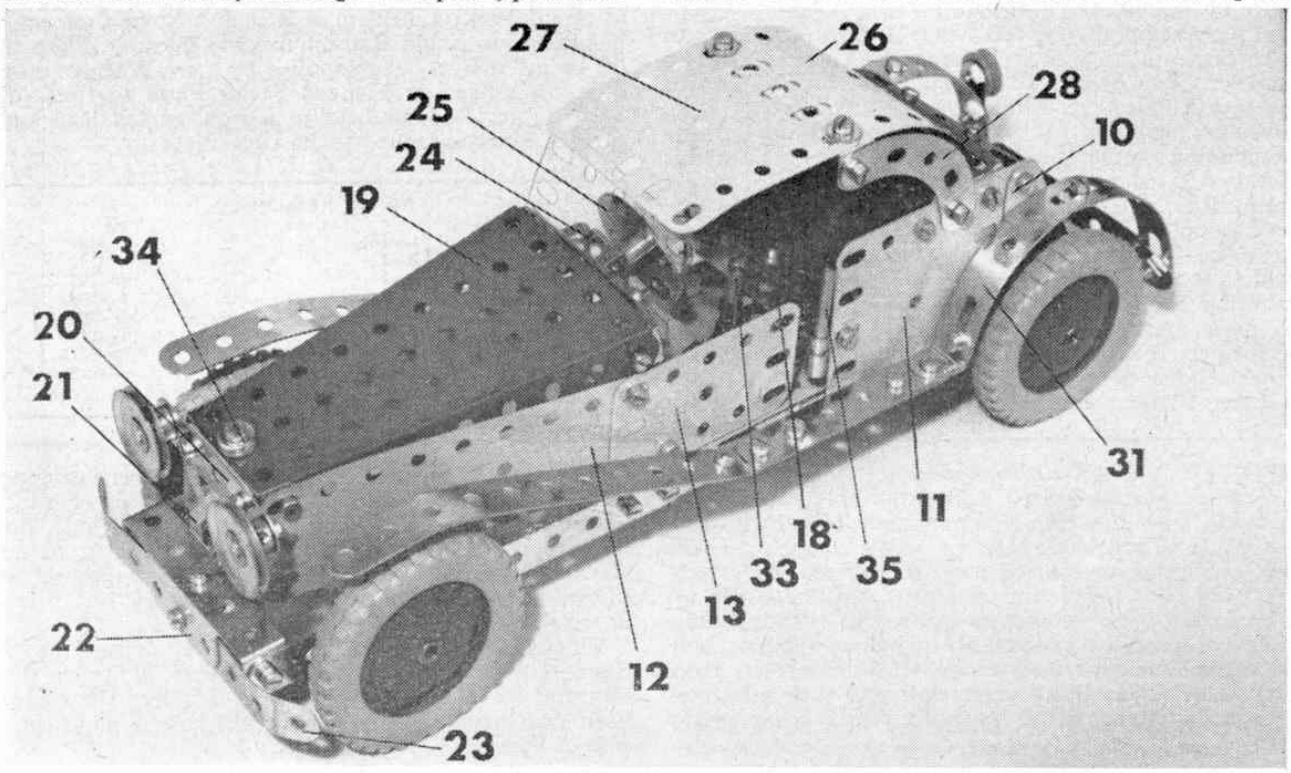

A WHIFF OF BY-GONE TIMES

Spanner describes two models that capture the lines of two classical sports cars, now almost extinct on today's roads

PERHAPS IT'S my imagination, but cars, these days, seem to be growing more and more alike. Different makes can sometimes quite easily be confused and even sports cars are beginning to look like saloon cars or vice versa. It hasn't always been like this, however. In times gone by, a saloon car was a saloon car and a sports job could not possibly be confused with it. I might add, incidentally, that the sports cars of the time really appeared far more "sporty" than their counterparts today although I do not of course suggest that they were any better as far as performance went.

It is easy to follow the changes in motor car design over the years by looking through old issues of *Meccano Magazine*. The car models featured there tend to mirror the real-life vehicles in use at the time of publication and you will see that this is so from the two models described here. Both are based on models found in past issues of the M.M. and I think you will agree that both are really distinctive in design.

The first is reminiscent of the famous Morgan three-wheeler, easily recognised by the twin-cylinder motor cycle engine mounted in front of the bonnet and open to the atmosphere. The model, however, draws its power from a Magic Motor.

Constuction is not difficult. Beginning as usual with the chassis, two $5\frac{1}{2}$ in. Strips 1 are joined by a $2\frac{1}{2} \times 1\frac{1}{2}$ in. Flanged Plate 2 and a $2\frac{1}{2} \times \frac{1}{2}$ in. Double Angle Strip 3. Note that the Flanged Plate projects a distance of one hole beyond the ends of the $5\frac{1}{2}$ in. Strips. A further two $5\frac{1}{2}$ in. Strips 4 are attached to Double Angle Strip 3 by Angle Brackets and to Strips 1 by Reversed Angle Brackets 5, then a $1\frac{1}{2} \times \frac{1}{2}$ in. Double Angle Strip 6 is bolted between Strips 4, as shown. Held by Spring Clips in the rear end holes of Strips 4 is a 2 in. Rod carrying a 1 in. Fixed Pulley 7 and a centrally-mounted $2\frac{1}{2}$ in. Road Wheel.

Now bolted to Flat Plate 2 is a $2\frac{1}{2}$ in. Strip 8 to the end of which a $3\frac{1}{2}$ in. Strip 9 is fixed at right angles. A Fishplate is lock-nutted to each end of this Strip, the securing Bolt also firmly fixing a Double Bracket 10 in place, then the Fishplates are further joined by a second $3\frac{1}{2}$ in. Strip 11, lock-nutted in place. Two Angle Brackets arranged in an open-ended "V" shape are fixed to the top of Strip 11 by Bolt 12. A $1\frac{1}{2}$ in. Rod is journalled in the lugs of each Double Bracket 10 to be held in place by a Spring Clip and a $2\frac{1}{2}$ in. Road Wheel.

At this stage, the Magic Motor can be fitted, being attached to Fishplates bolted to Strips 4. Bolted to the brake lever of the Motor is a $1 \times \frac{1}{2}$ in. Double Bracket in the lugs of which a 2 in. Rod extended by a Rod Connector 13, is held by Spring Clips. The Pulley on the Motor output shaft is connected to Pulley 7 by a Driving Band.

Turning to the body, each side is similarly built up from a $5\frac{1}{2} \times 1\frac{1}{2}$ in. Flexible Plate 14 and a $2\frac{1}{2} \times 1\frac{1}{2}$ in. Flexible Plate 15, is bolted to Strip 1, a distance of one hole separating the Plates. Another $5\frac{1}{2}$ in. Strip 16 is bolted between the upper edges of the Plates then Strips 16 at each side are connected by two $2\frac{1}{2} \times \frac{1}{2}$ in.

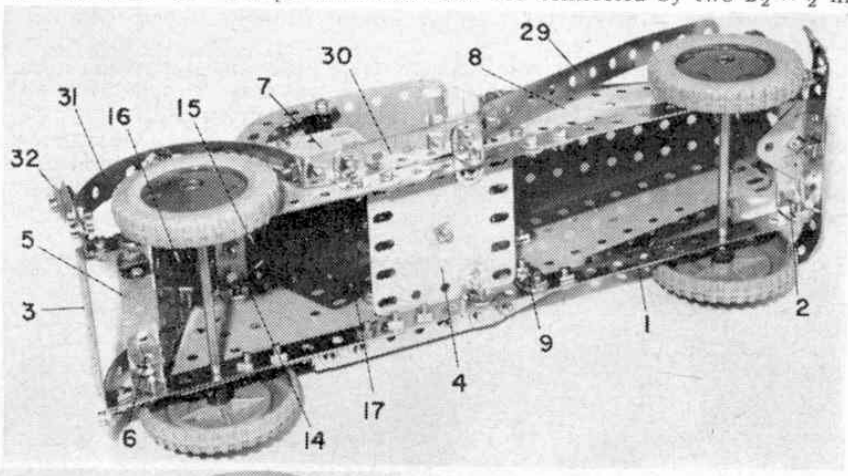

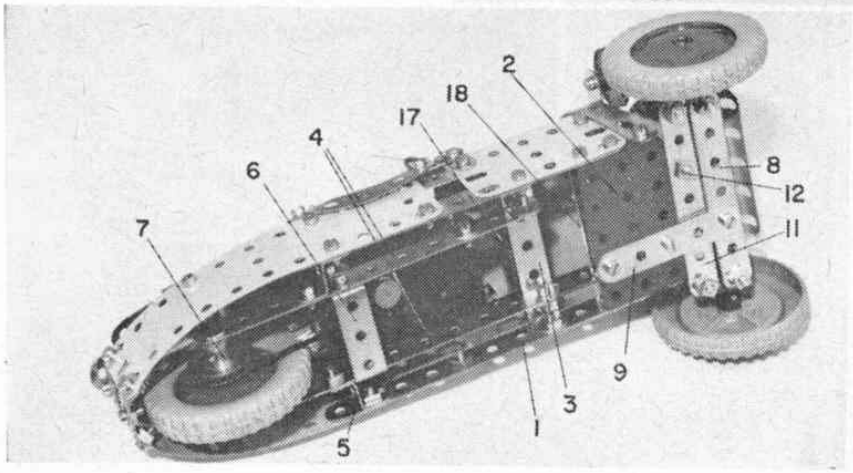

Above right: One of the most easily-recognisable sports cars of recent times was the Morgan three-wheeler, renowned for its "open-air" engine. This simple Meccano model, based on the Morgan, is powered by a Magic Clockwork Motor.

At right: For "sporty" looks, you can't beat the pre- and early post-war sports cars. This Meccano model is very reminiscent of such oldies.

Above: The simple but functional chassis of the model is clearly shown in this photograph.

At left: An underside view of the three-wheeler showing the layout of the chassis and steering gear.