Meccano Constructors' Guide

by B. N. Love

Part 2 *(continued)*

Gears . . .

AN EXCELLENT example of these latter mechanisms is embodied in the automatic gearbox illustrated in Fig. 11. The input shaft is identified by the 2 in. Sprocket Wheel which receives a chain drive from an electric motor. In addition to the 19-teeth Pinion and 1 in. Gear Wheel, the input shaft also carries a Worm at its centre. The idler Pinion, also of 19-teeth, can be seen clearly, bolted to the side of the gearbox frame by means of a $\frac{3}{4}$ in. Bolt and double lock-nuts. The output shaft carries a third 19-teeth Pinion and a second 1 in. Gear Wheel between the side frames and a 19-teeth Pinion with a $\frac{3}{4}$ in. face at its extreme end.

The under view of the gearbox in Fig. 11 shows the "secret" of the automatic operation. A 57-teeth Gear Wheel mounted on a $1\frac{1}{2}$ in. Axle Rod is free to turn in journals made from a Double Bent Strip and the end plate of the gearbox. This Gear Wheel carries a Slide Piece secured by its Grub Screws to a $\frac{3}{8}$ in. Bolt carried in one of the radial holes of the Gear Wheel. The Slide Piece pivots freely on its Bolt and holds a $3\frac{1}{2}$ in. Perforated Strip in its jaws. The centre hole of this Strip has a standard Bolt lock-nutted firmly in position so that the bolthead engages between the boss of the 1 in. Gear Wheel on the output shaft and a Collar next to the final 19-teeth Pinion. The upper end of the $3\frac{1}{2}$ in. Strip pivots on a $1\frac{1}{2}$ in. Axle Rod held firmly by a Crank reinforced by four $2\frac{1}{2}$ in. Perforated Strips bolted to the end plate of the gearbox. The $3\frac{1}{2}$ in. Strip is positioned at its pivoting end by a Collar locked to the fixed pivot rod and a $1\frac{1}{2}$ in. Perforated Strip bolted to the $3\frac{1}{2}$ in. Strip three holes down from the top, but spaced from it by a second Collar through which a $\frac{3}{8}$ in. Bolt is passed. This construction forms a parallel fork giving stability to the $3\frac{1}{2}$ in. Strip when it is moved across the face of the 57-teeth Gear Wheel by the Slide Piece.

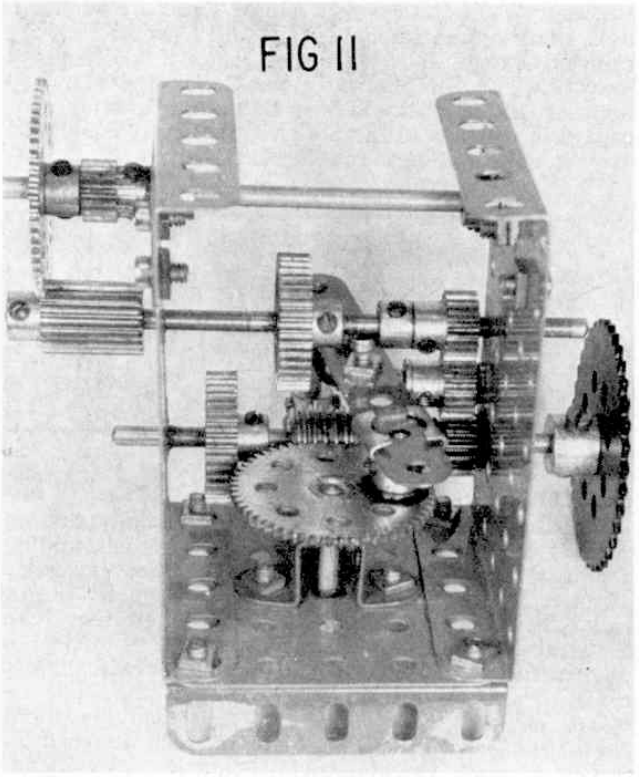

Fig. 11. The automatic reversing gearbox. The top view shows the pivot arrangements at the upper end of the gear change lever. The under view shows the Worm-driven Gear Wheel which moves the gear-change lever.

Operation is as follows: as the input shaft rotates, the Worm drives the 57-teeth Gear Wheel which rotates slowly and causes the Slide Piece to traverse its face. In so doing, the Slide Piece causes the $3\frac{1}{2}$ in. Strip to oscillate, also very slowly, and the Bolt located in the centre of the Strip simply moves the output shaft alternately left and right, thus changing over the meshing from the 19-teeth Pinions to the 1 in. Gear Wheels and vice versa. As mentioned before, this gear arrangement gives a 1 : 1 ratio, but provides for a slight "pause" when neither gear on the output shaft is actually engaged. This particular mechanism is very suitable for a demonstration model which carries out repetitive movements requiring a continued reversing sequence. In other words, the mechanism is entirely self programming.

No chapter on the use of Meccano Gears would be complete without a mention of two special forms of application which offer tremendous scope for the advancing model builder. These are the Differential Gear and the Epicyclic Gear. At this stage of the Constructors' Guide it is not intended to discuss them

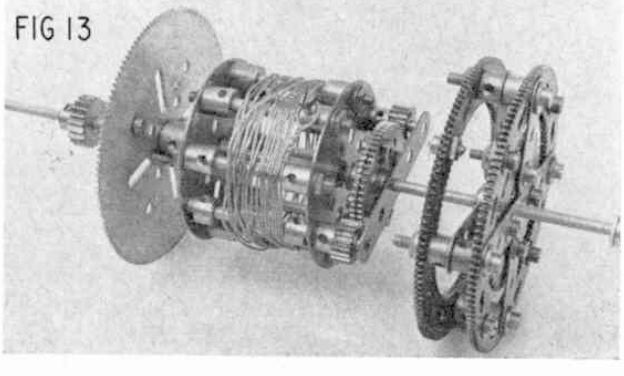

Fig. 13. The epicyclic gear made from Meccano parts. The upper view shows the component parts which made the self-maintaining clock winding drum in the lower view.

at length as they will feature in other mechanisms to be dealt with in later chapters. However, Fig. 12 illustrates two applications of the Differential Gear, the upper view showing the use of it in the rear axle drive of a heavy duty crawler tractor. In this case, the differential " cage " carrying two Pinions and two Contrate Wheels is rotated by a Pinion drive applied to a 2½ in. Gear Wheel bolted to the cage. This gives a very powerful drive to the rear axle assembly, but allows either " half-shaft " to rotate at different speeds for steering and braking purposes. This mechanism will be more fully explained in a later chapter dealing with motor vehicle transmissions.

The lower illustration of Fig. 12 shows an unusual application of the differential, this time in the works of an astronomical clock. As this particular clock shows the phases of the moon with great accuracy, the dial which shows the moon information is supplied with motion from different sources, all coupled to the clock's 24-hour timing mechanism and finally fed to the moon dial shaft via a differential gear which can be seen in the illustration.

Finally, possibly the most sophisticated of all the gear systems available in Meccano are the epicyclic gear arrangements. Briefly, these consist of " sun and planet " mechanisms in which a Pinion or similar gear " runs round " a central gear in the same way that a planet orbits the sun, so to speak. Part No. 180, the 3½ in. diameter Gear Ring, is of great assistance in forming epicyclic arrangements as it has both internal and external teeth. Fig. 13 shows a " self-maintaining " winding drum for a weight driven apparatus in which the weight will still continue to drive the mechanism, even while the weight is actually being wound up.

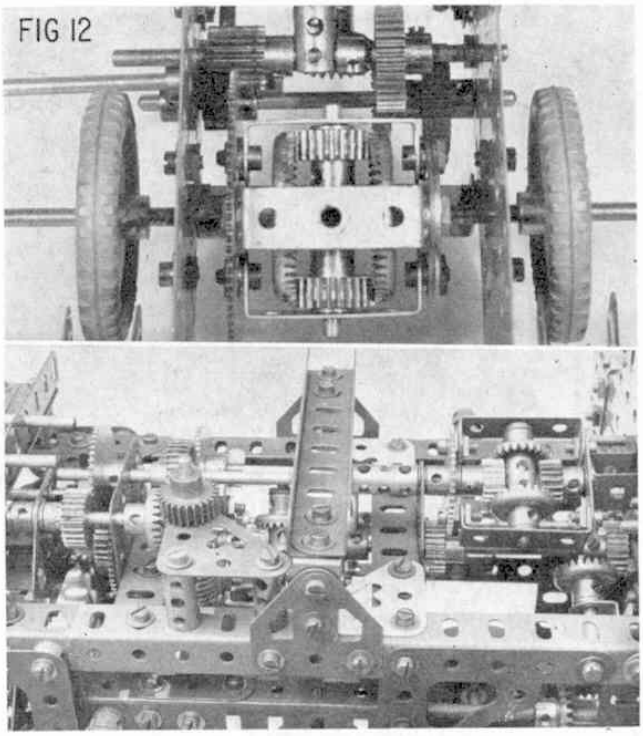

Fig. 12. Two applications of the Differential gear. Upper illustration shows its use in the rear axle assembly of a tractor. Lower view shows its use as a " mixing " box for clock motions combining to show lunar movement.

Part 3 : Basic Crane Structures

FOR THE majority of Meccano enthusiasts a working model of a crane is among the first of their endeavours and for many it remains an ambition to build bigger and better cranes as they grow older and their outfits grow larger. In this chapter we shall be considering basic crane structures and their development. Probably the simplest and oldest crane in history is the pole hoist, known as the ' Shaduf ' and used by desert farmers for countless centuries to raise water for the irrigation of their land. Fig. 1 shows how basically simple the Shaduf is. A counterbalanced pole carrying a rope fixed to a bucket at one end and a heavy stone at the other is pivotted by a rope lashing at the top of a forked post set firmly in the ground. The point of pivot is arranged to give the farmer a mechanical advantage adjustable to his height, reach and the weight of the filled bucket so that minimum effort is required to raise the water.

The invention of the windlass was an early development of applying a lever in rotary fashion for raising weights and we are all familiar with the examples of this found over water wells, etc. By adding a pulley to the system, at a fixed height, the primitive crane developed into its basic mechanical form of the crane so that drawbridges, sacks of corn and stone blocks were handled quite easily by our forefathers. However, such fixed hoisting systems suffered from lack of mobility and the need for portability gave rise to the use of ' sheerlegs ', a simple Meccano model of which appears in Fig. 2. This is simply a pair of strong poles lashed together at the top to support a single pulley block and set on the ground with ' feet apart', rope stays being used to support the sheerlegs. In the Meccano model, Axle Rods are used to form the legs and Meccano cord is used for the stays and hoisting ropes. Despite its crude design, this simple crane has the advantage both of portability and of ' luffing ', i.e. the sheer legs can be raised or lowered to alter the ' reach ' of the crane. The huge stone blocks of the ancient Pyramids and world-famous cathedrals were

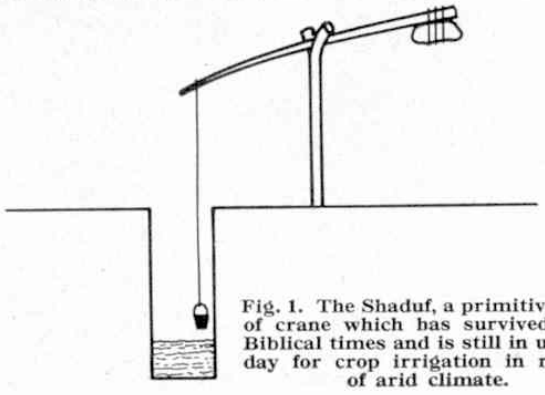

Fig. 1. The Shaduf, a primitive form of crane which has survived from Biblical times and is still in use today for crop irrigation in regions of arid climate.

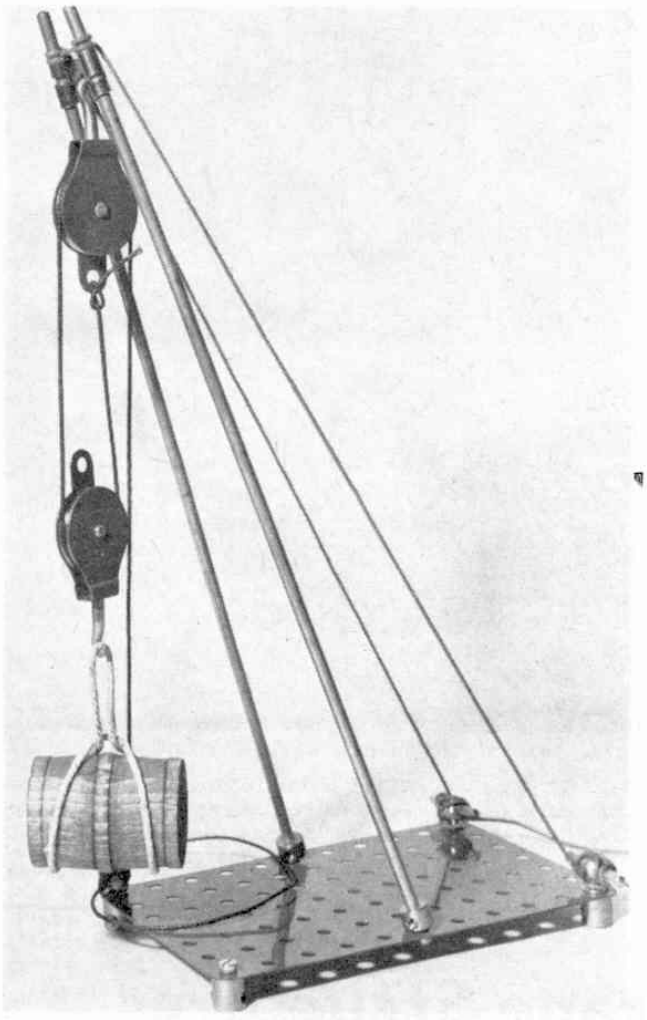

Fig. 2. Meccano model of a Sheerlegs, a simple but versatile crane.

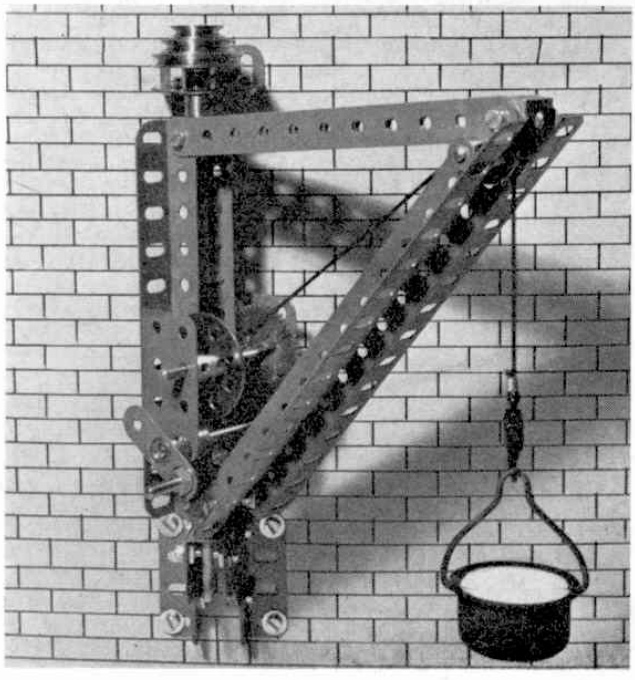

Fig. 3. Typical outline of a derrick crane with luffing and slewing jib. Stability is achieved by anchoring the base at the points marked (a) and rigidity is obtained by the well-known principle of triangular construction.

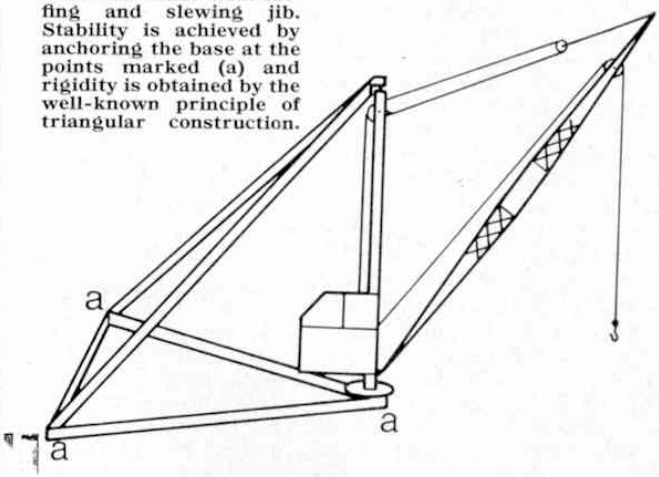

set in place by such simple tackle and today's jobbing builder with a steel joist to raise on a small building job still uses sheerlegs in preference to an expensive hiring of a mobile crane.

When men were able to strengthen their sheer legs with iron bands and to provide cast irong gearing, the derrick crane evolved as the natural course. The twin sheer legs were replaced by a single jib and, once again, the basic rigidity of triangular construction was well exploited in supporting the jib (see Fig. 3). A major improvement lay in the fact that not only could the derrick crane be 'luffed' but the jib could also be 'slewed', i.e. rotated at its base so that the jib could swing in a wide arc.

Much of this natural development evolved from the use of ships' spars as harbour derricks. When the huge square sails of the old sailing ships were stowed below, the sail spars and yard arms became working derricks for hoisting cargo and swinging it aboard. It is from such nautical beginnings that terms like 'luff' and 'slew' and others like 'mast' and 'brace' have been adopted into the language of the crane engineer. So long as the triangular base of the derrick crane is securely anchored to the ground at the points (a) in Fig. 3, the derrick is a very rigid and sturdy crane. It is still found in stonemasons yards, timber yards and on modern building sites at low levels. By mounting each corner of the triangular base on rail trucks, ballasted with pig iron or concrete slabs, the derrick becomes mobile and can be shifted across the building site bodily.

Because of the simplicity of its open structure and its inherent stability, the derrick crane is a popular feature in many of the Meccano Manuals of Instructions. Fig. 4 shows a simple type of foundry derrick crane modelled in Meccano for use in a fixed position on a wall. The jib has a fixed radius and is designed to slew over a fixed arc carrying a bucket of molten metal with no fear of a collapsing jib.

Despite its versatility, the derrick crane has a serious disadvantage in certain circumstances and this is illustrated in Fig. 5. The diagram at (a) shows a simple derrick crane with the hook at ground level. When the jib is luffed to the position shown in (b), it is seen that the hook has been raised through a considerable height even though there has been no winding on of the hoisting rope. If such a derrick is luffed at the same time as it is being slewed, for example when loading

Fig. 4. Model of a wall-mounted foundry derrick crane for handling molten metal. The jib is "tied" at a fixed angle for safety and swings through an arc of fixed radius.

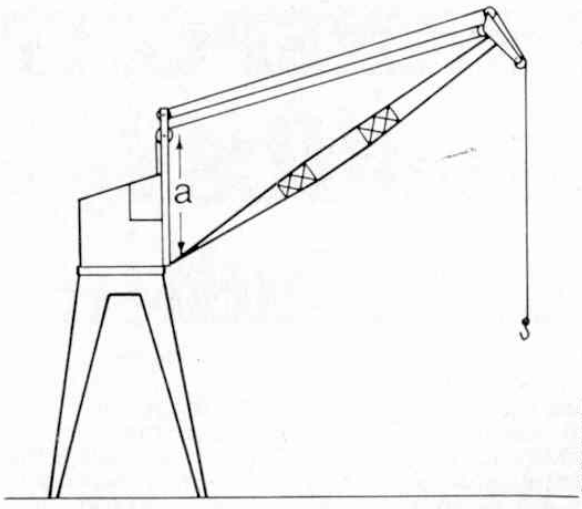

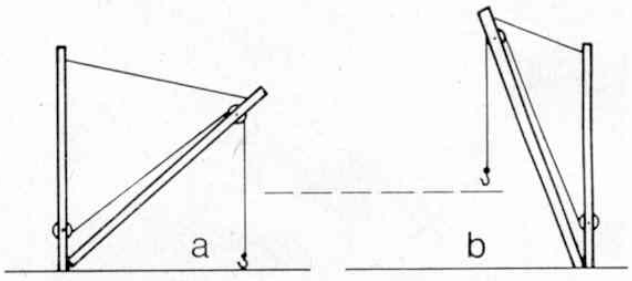

Fig. 5. If two derricks of identical jib length are luffed at different angles without change of the winding drum, the hook will rise through a considerable distance.

Fig. 6. Diagram of a dockside crane employing Toplis level-luffing gear. Note that the hoisting rope is continuous throughout and constitutes a 3 : 1 Pulley system to compensate for the luffing movement of the jib giving a level position of the load over a wide range of jib angle.

ships' holds at the docksides, a dangerous change in the level of the load could occur. To combat this tendency, a simple but ingenious method of maintaining the load at the same height during luffing operation was introduced and is known as the Toplis Level-Luffing Gear. This is illustrated diagrammatically in Fig. 6 which shows the outline of a level luffing crane. For clarity, no ropes or mechanisms are shown for raising or lowering the jib and the ropes appearing in the diagram are concerned with load hoisting only. In fact, it is a single rope which is shown and it is in the reeving of this hoisting rope over the pulley system that the level luffing principles lies. As long as the jib is not being raised or lowered, any length of hoisting rope paid out from the winding drum will result in an equal fall of the crane hook. When the winding drum is stopped and the jib is raised however, the pulley system (in this case with a 3 : 1 ratio) allows the hoisting rope to run back over the jib head and thus maintains the hook at a constant height. The distance 'a' between the lower end of the jib and the top guide pulleys is critical and bears a direct ratio to the length of the jib of approximately 5 : 16. Although the diagram shows the hoisting rope guide pulleys set one above the other, in practice they would normally be side by side on the same spindle but for clarity of the reeving arrangement they are drawn as shown.

It is not really very easy to visualise this compensating action in the abstract and it is therefore very interesting and instructive to make a model of a crane employing the Toplis Level-Luffing Gear and such a model is illustrated in Fig. 7. As a refinement, the jib pivot has been made adjustable over a wide range so that variations of its position can be made in conjunction with observations of the range of jib angle over which the load can be made to remain at a constant height. It is important to remember that, when making these observations, the winding drum for the load must be left untouched and only the luffing crank should be turned. When the critical point for the lower end of the jib has been found, the degree of level luffing obtained is quite surprising, departing from the ideal only at the extreme limits of jib lowering.

Because of the single rope simplicity of this type of crane, it is very useful for the rapid handling of light loads at the dockside, etc., but where a more powerful crane is required, the problem of level luffing may be solved by the geometrical arrangement of the jib structure. Fig. 8 shows a very efficient luffing system in Meccano in which the principle of a pivotted parallelogram is employed to cause the tip of the fly jib (from which the final hoist rope is suspended) to maintain a constant level above the ground. Such a system lends itself very easily to counterbalancing so that very little power is actually required to operate the mechanical luffing movement and a small economical motor can be employed for the job. This mechanical linked system also has the advantage that no maintenance or replacement of luffing ropes is required.

To be continued next month.

An additional illustration to Fig. 7 and an illustration Fig. 8, referred to in the text will appear in the next instalment which will continue on the subject of BASIC CRANE STRUCTURES.

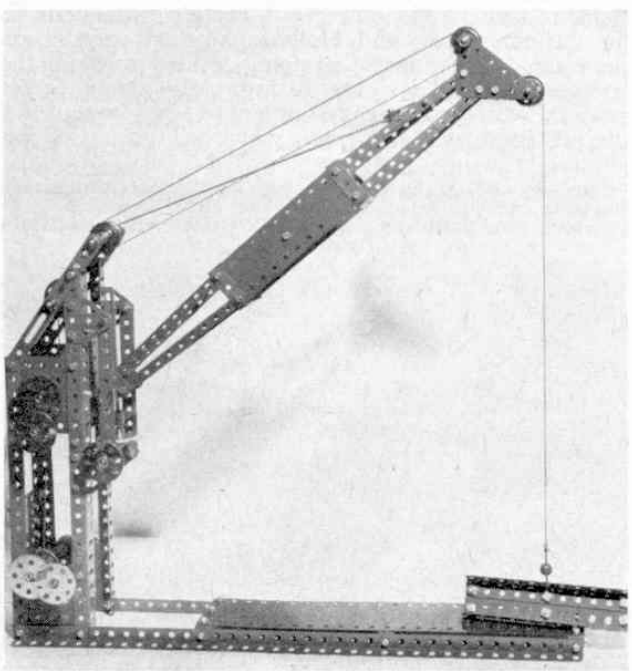

Fig. 7. Demonstration model of a Toplis Level Crane. The long "foot" at the base gives stability to the model and provides a level platform for observing the constant level of the load when the jib is luffed.