Build a Meccano Electric Clock

Time waits for no man, but Spanner, looking back through his files, found a handsome Electric Clock described in a thirteen year old MM! This month he shows how to build it in a slightly modified form.

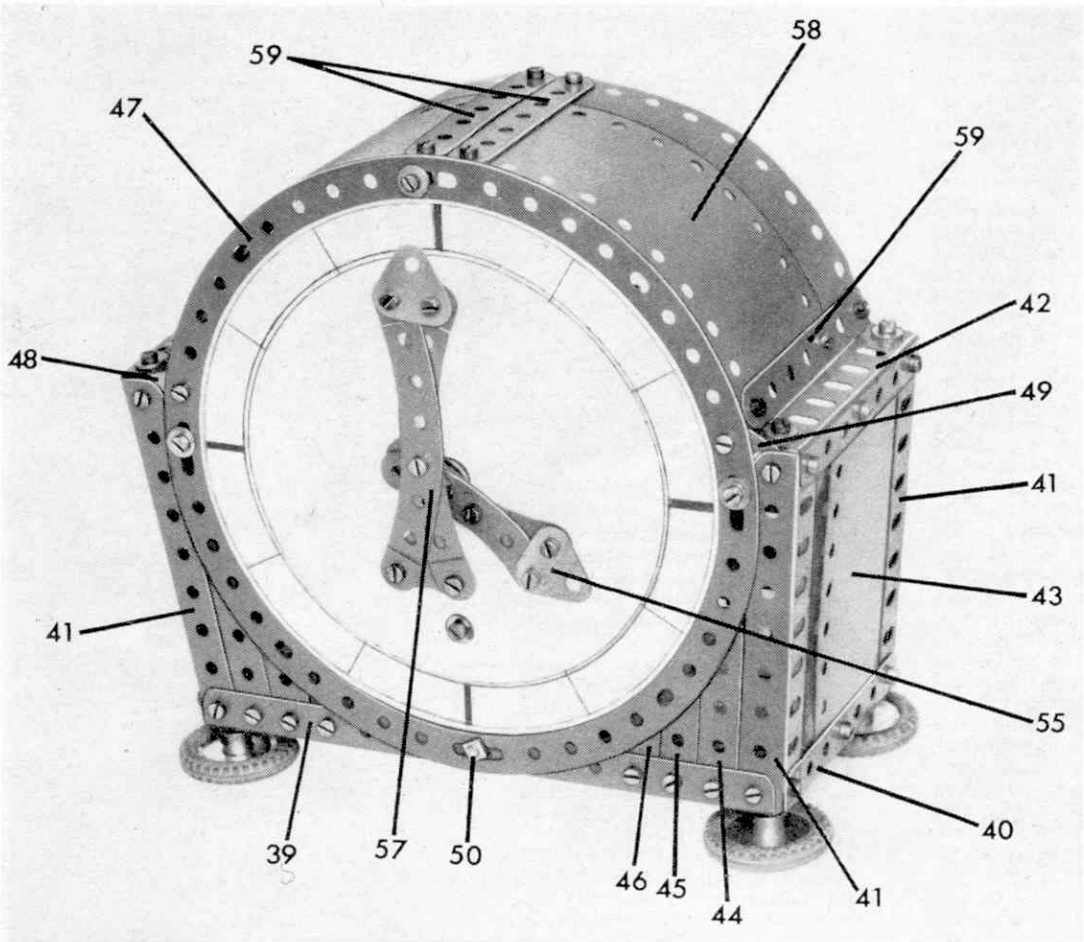

CLOCKS always provide a challenge to the serious Meccano model-builder, a fact proved by the excellent reception given to the automatically-winding weight-driven clock we featured in these pages last year. In fact, clocks of all types are no strangers to Meccano Magazine, but it is many years since readers were given an effective electric clock to build. Indeed, the last clock of this type appeared in a 1954 issue of the 'M.M.', so I felt it was about time we featured another example and you will find this described below. Actually, it is not strictly correct to describe the model as 'another' example, as it is really a modified version of the model featured in 1954, but I doubt if many of today's readers will have seen the original.

The problem with electric clocks, of course, is obtaining a motor that will run at a constant speed irrespective of voltage changes and, luckily, a synchronous motor will do just that. A motor of this type runs from Alternating Current at a speed governed by the fluctuations of the electricity supply frequency, the actual speed depending on the number of 'poles' possessed by the motor. Provided the power source has sufficient voltage to drive the motor, changes in voltage will not affect its speed, as the number of cycles per second inherent in the electrical supply does not alter.

Framework

First to be built should be the chassis or framework for the motor and gearing. This, in fact, can be completed quite independently of the case and can be fitted as a whole into the case when finished. To begin with, two 7½ in. Strips 1 are bolted to a 5½ in. by 3½ in. Flat Plate 2, a distance of one hole separating them. The Bolts holding the lower of these Strips are also used to fix two 1½ in. by ½ in. Double Angle Strips to the other side of the Plate, one at each edge, and a 1½ in. Flat Girder 3 is bolted to each of these Double Angle Strips. Situated in the centre of the gap between Strips 1, and also bolted to Flat Plate 2, are two 1½ in. Strips 4 which will later provide an extended bearing for the motor mainshaft.

Attached to the ends of each Strip 1 are two 1½ in. Double Angle Strips, the free lugs of which are joined by another 7½ in. Strip 5, then Strips 5 are themselves joined by a 3 in. by 1½ in. Flat Plate 6, protruding a distance of two holes beneath lower Strip 5. Fixed to the inside of this Flat Plate, in the gap between Strips 5, are another two 1½ in. Strips which will later provide the other extended bearings for the motor mainshaft.

Bolted to the inside of Flat Plate 1, one at each corner, are four 1½ in. by ½ in. Double Angle Strips 7, the free lugs of which are connected as shown by two 5½ in. Strips 8 and two 3½ in. Strips 9. A further two 3½ in. Strips 10 are fixed between Strips 8, the securing Bolts passing through the second holes from the tops of Strips 8, while another three 3½ in. Strips 11 are fixed between the centre holes of Strips 8. Two

$1\frac{1}{2}$ in. Angle Girders 12 joined by a $3\frac{1}{2}$ in. by $\frac{1}{2}$ in. Double Angle Strip 13, are bolted to the inside of Flat Plate 2.

Gearing

Journalled in Strips 10 and Flat Plate 2 is a 2 in. Rod held in place by a 50-teeth Gear 14 and a $\frac{3}{4}$ in. Pinion 15, mounted one each side of the Flat Plate. Pinion 15 engages with a 50-teeth Gear fixed, along with a $\frac{1}{2}$ in. Pinion 16 and a Collar, on another 2 in. Rod journalled in the centre holes of Strips 10 and Flat Plate 2, the Gear Wheel and Collar holding the Rod in place. Gear Wheel 14, on the other hand, engages with a $\frac{3}{4}$ in. Pinion 17 on a 2 in. Rod journalled in Flat Plate 2, Double Angle Strip 13 and a $1\frac{1}{2}$ in. Flat Girder 18, bolted to corresponding Strip 8. This Rod also carries a 1 in. Gear 19, between the Flat Plate and the Double Angle Strip, and a 1 in. Pulley with rubber Ring 20 and a 50-teeth Gear Wheel 21 between the Double Angle Strip and the Flat Girder. Note that Pulley 20 is clamped tight against Gear 21, the latter being loose on the Rod.

Mounted in the centre hole of Double Angle Strip 13 and Flat Plate 2 is a $4\frac{1}{2}$ in. Rod 22, which protrudes about two inches in front of the Double Angle Strip. On this Rod is fixed a 1 in. Gear, in mesh with Gear 19, while mounted loose on the Rod is a 57-teeth Gear 23, spaced from the Double Angle Strip by three Washers and in mesh with Pinion 16. The boss of Gear Wheel 23 is held in one end of a Socket Coupling 24, which is also loose on the Rod. At a later stage this "loose" assembly will be held in place by the minute hand of the clock as will be seen.

Still on the gearing, another 2 in. Rod 25 is journalled in the very centre hole of Flat Plate 2 and in the corresponding holes of Strips 11, a $3\frac{1}{2}$ in. Strip having first been bolted across the inside of Plate 2 to provide an extended bearing for the Rod, which is held in place by a $\frac{1}{2}$ in. Pinion 26 and a 57-teeth Gear 27. Also journalled in Strips 11 and Face Plate 2 is yet another 2 in. Rod held in place by a Collar and a $\frac{3}{4}$ in. Pinion 28 and carrying a 50-teeth Gear 29 in its centre. Gear 29 engages with a Worm 30 on a 4 in. Rod held by Collars in $1\frac{1}{2}$ in. Flat Girders 3. Towards the other end of this Rod is a further 50-teeth Gear, which engages with another Worm 31, fixed on a 4 in. Rod 32 also journalled in Strips 11 and Flat Plate 2, a Collar holding it in place. Fixed on the Rod outside the Flat Plate is a 57-teeth Gear Wheel 33 that meshes with Pinion 26.

Motor

As already mentioned, the driving motor is of the synchronous type consisting of a special built-up wheel or 'rotor' revolving between two electro-magnets. Two Bush Wheels 34, each with eight Rod and Strip Connectors 35 bolted at equal angles to its face, are fixed on a $2\frac{1}{2}$ in. Rod, journalled in Flat Plates 2 and 6 with three Washers spacing the inside Bush Wheel from Strips 4. The Bush Wheels must be so arranged that corresponding Rod and Strip Connectors lie in identical positions with perhaps 1/12 in. separating them. The Rod is held in place by a Collar outside Plate 6 and by a $\frac{1}{2}$ in. Pinion inside Plate 2, this Pinion meshing with Gear Wheel 27.

Two electro-magnets are now each built up from two Cylindrical Coils 36 (Elektrikit part No. 522), fixed together, with their contacts joining, by $\frac{3}{8}$ in. Bolts. The 'E' terminal of one Coil must be in contact with the 'S' terminal of the other. Two 1 in. Cylindrical Cores (Elektrikit part No. 528) are joined together by a 1 in. Screwed Rod and are attached to a $1\frac{1}{2}$ in. Strip 37 by a Bolt passed through the centre hole of the Strip and screwed into one of the Cylindrical Cores. The whole unit is then attached to the Double Angle Strips, bolted between Strips 1 and 5, by $\frac{1}{2}$ in. Bolts, with a Washer and a Collar 38 on the shank of each Bolt acting as spacers. Finally, $\frac{1}{2}$ in. Pulleys with boss are fixed on the ends of Rods 22 and 32.

Case

The completed mechanism can, of course, be fitted in any suitable case but we have chosen a typical mantel clock design. A compound $7\frac{1}{2}$ in. by $3\frac{1}{2}$ in. flat plate, obtained from two $5\frac{1}{2}$ in. by $3\frac{1}{2}$ in. Flat Plates overlapped seven holes, is edged along three sides by a $7\frac{1}{2}$ in. Angle Girder 39 and two $3\frac{1}{2}$ in. Angle Girders 40. Fixed at each corner is a $4\frac{1}{2}$ in. Angle Girder 41, then the tops of each pair of these Angle Girders are joined by a $3\frac{1}{2}$ in. Angle Girder 42,

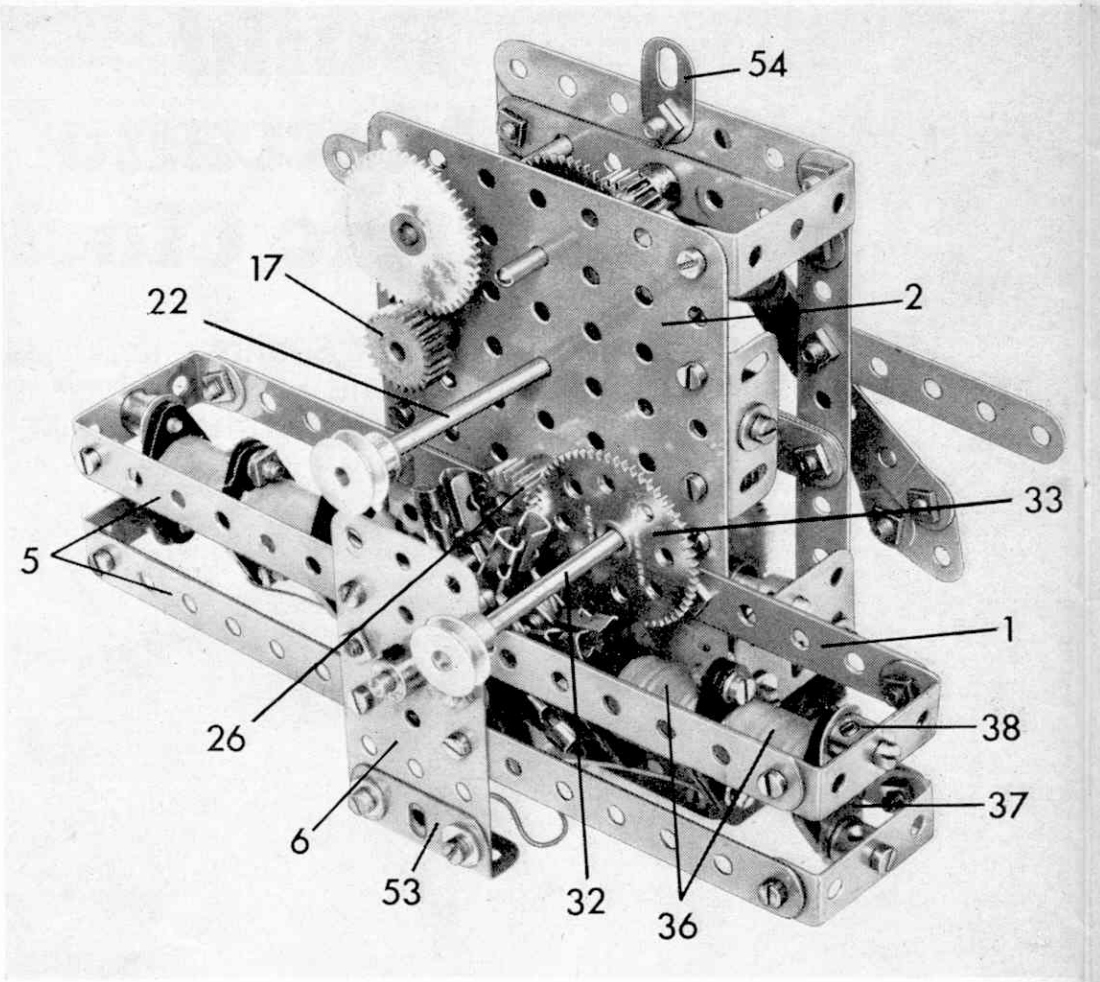

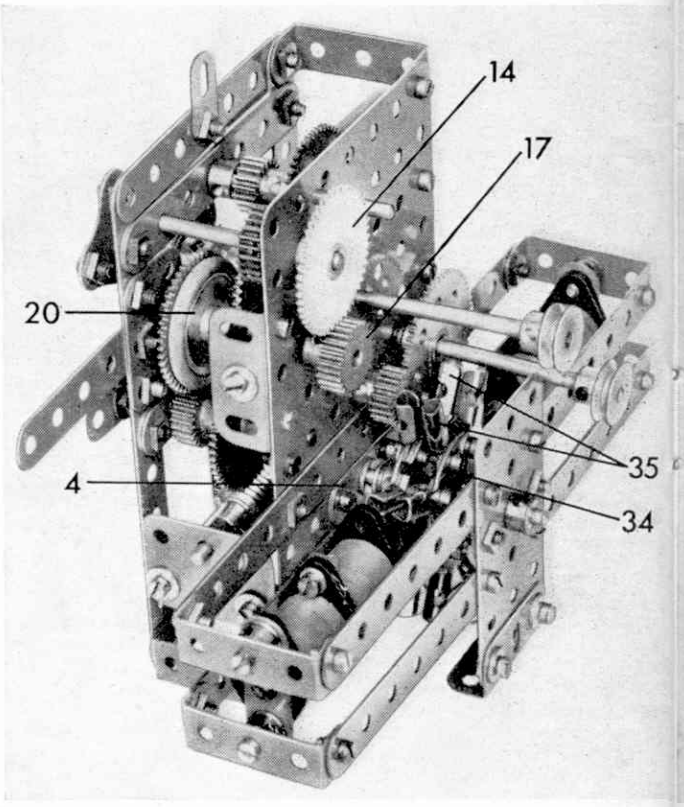

Top: the 'works' of the clock before being mounted inside the case. In this view lower $3\frac{1}{2}$ in. Strip 9 has been removed. Above: a rear view of the Clock mechanism showing the synchronous motor, built up from standard Meccano and Elektrikit parts

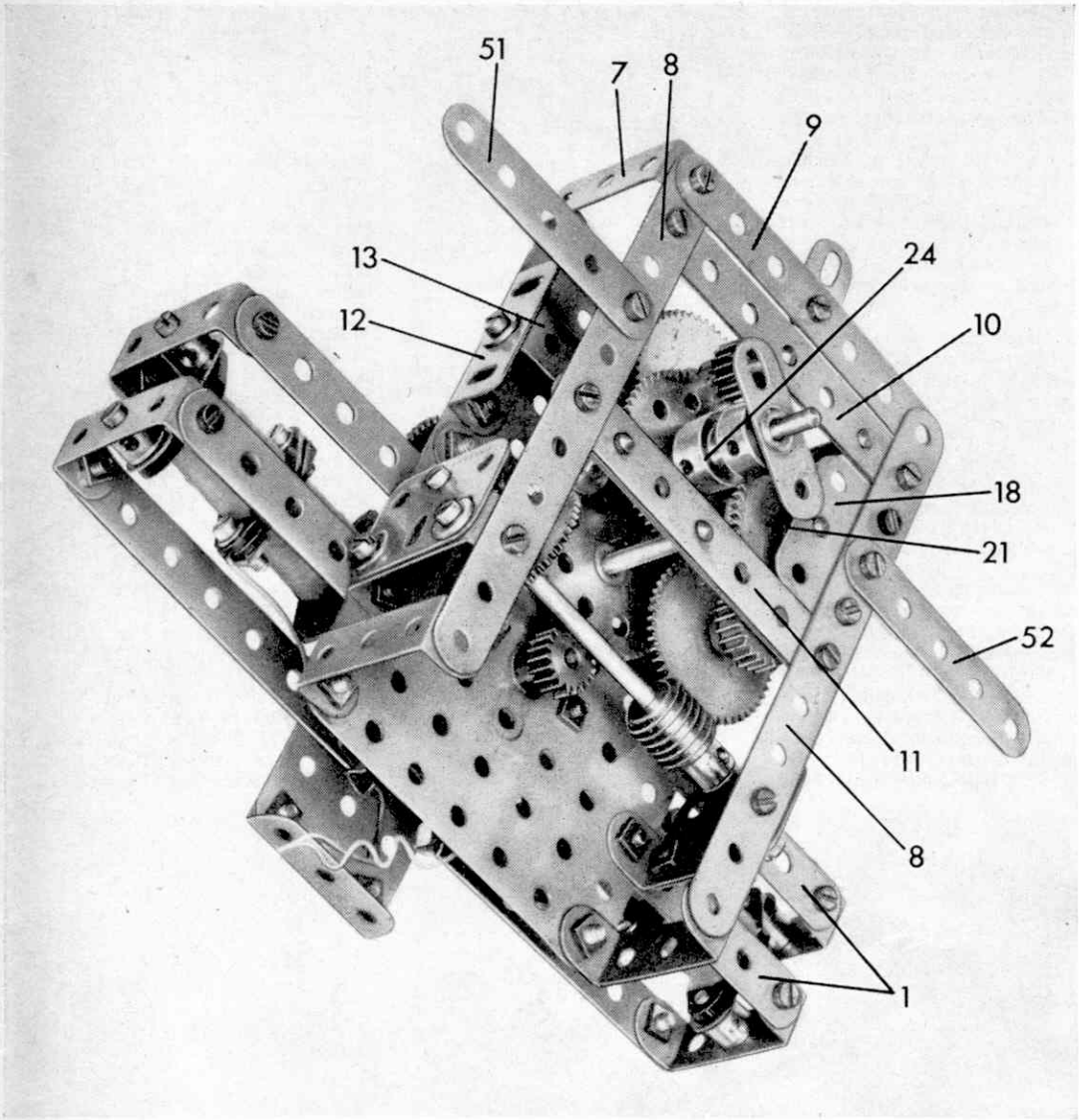

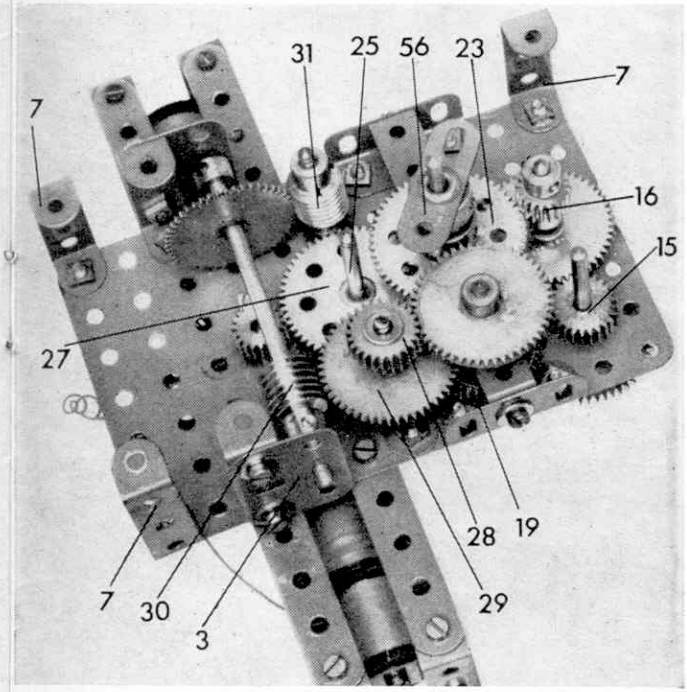

Top: another view of the motor. Note the friction drive to the hands, which enables the hands to be set without affecting the motor. Above: in this view of the drive mechanism the front framework has been removed to show the layout of the gears

the resulting space being enclosed by two $4\frac{1}{2}$ in. by $2\frac{1}{2}$ in. Flexible Plates 43.

Bolted to each end of Angle Girder 39, and running in order from Angle Girder 40, are a $2\frac{1}{2}$ in. Strip 44, a $1\frac{1}{2}$ in. Strip 45 and a 1 in. Corner Bracket 46. A $7\frac{1}{2}$ in. diameter Circular Strip 47 is then attached to Girders 40 by two Fishplates 48 and 49 fixed between the Circular Strip and the upper holes of the Angle Girders.

At this stage the mechanism should be fixed in position, but first of all, a 2 in. Strip should be attached to the centre of lower Strip 9 by a $\frac{1}{8}$ in. Bolt 50, the shank of the Bolt pointing forwards. The mechanism is then positioned in the case with the shank of Bolt 50 protruding through the centre hole of Girder 39 and the corresponding hole of Circular Strip 47, and a Nut is added. In addition two $2\frac{1}{2}$ in. Strips 51 and 52 are bolted between Strips 8 and Circular Strip 47. Also, a $1\frac{1}{2}$ in. Angle Girder 53 is bolted to the bottom of Flat Plate 6 and the horizontal flange of this rests on the compound $7\frac{1}{2}$ in. by $3\frac{1}{2}$ in. Flat Plate, but note that it is not bolted to the compound flat plate. A circular disc, a fraction under $6\frac{1}{2}$ in. diameter is cut out of stiff cardboard, is marked up to make the face of the clock and is fixed in position by bolting it to the top of Strip 49. It is also bolted to a Fishplate 54 attached to the centre of upper Strip 9.

An hour hand is built up from two $2\frac{1}{2}$ in. Curved Strips joined at one end by a 1 in. Triangular Plate 55. The other ends are overlapped so that the second holes in the Strips are in line, then a Double Arm Crank 56 is bolted to them with its boss in line with the second holes. The completed hand is mounted loose on Rod 22, but with the boss of the Double Arm Crank fixed in the outer end of Socket Coupling 25.

The minute hand is built up from two 4 in. Stepped Curved Strips 57, joined at one end by a 1 in. Triangular Plate and at the other end by a 1 in. Corner Bracket. A Crank is bolted to the underside of the Curved Strips and is then tightly fixed on the very end of Rod 22. The boss of Double Arm Crank 56 should not be clamped so tightly against the hour hand that it causes friction when the hands revolve.

Lastly, a 10 in. by $3\frac{1}{2}$ in. compound Flexible Plate 58 is built up from four $5\frac{1}{2}$ in. by $2\frac{1}{2}$ in. Flexible Plates overlapped as shown by four $3\frac{1}{2}$ in. Strips 59, then the complete unit is curved to shape and is attached to Angle Girders 42 by Obtuse Angle Brackets. It is also attached to the top dead centre of Circular Strip 47 by an ordinary Angle Bracket.

Wiring

Wiring of the model is simple. The lower terminals of each electro-magnet are connected together by a length of wire whereas the upper terminals of the electro-magnets are connected individually, one to one terminal of the power source and the other to the other terminal of the power source. The power source itself should give 15 volts AC. To start the clock, the Pulley on the end of Rod 32 should be turned until the wheel built up from Bush Wheels 34 is revolving at a speed 'synchronous' with the AC current, i.e. 750 r.p.m. Once this speed is attained the clock should continue working under its own power.

Before the model will operate at its best, you will probably find that a certain amount of adjustment is required. The things to be checked and adjusted if necessary are the positions of Rod and Strip Connectors 35 in relation to each other and the distance of the Rod and Strip Connectors from the Cores of the electro-magnets. Of course, all moving parts, particularly the built-up wheel, must be as free from friction as possible.

Parts required

4 of No. 1b	2 of No. 23a	2 of No. 77
2 of No. 2	2 of No. 24	2 of No. 82
11 of No. 3	3 of No. 25	2 of No. 89b
4 of No. 5	3 of No. 26	2 of No. 90
1 of No. 6	5 of No. 27	3 of No. 103h
8 of No. 6a	3 of No. 27a	8 of No. 111a
1 of No. 8b	2 of No. 31	8 of No. 111c
4 of No. 9a	2 of No. 32	3 of No. 133
4 of No. 9b	130 of No. 37a	4 of No. 142c
3 of No. 9f	120 of No. 37b	1 of No. 145
3 of No. 10	40 of No. 38	1 of No. 155
5 of No. 12	10 of No. 48	1 of No. 171
1 of No. 15a	1 of No. 48b	4 of No. 191
2 of No. 15b	3 of No. 52a	4 of No. 192
1 of No. 16a	9 of No. 59	16 of No. 212
3 of No. 17	1 of No. 62	4 of No. 522
1 of No. 18a	1 of No. 62b	4 of No. 528
5 of No. 22	1 of No. 73	