by **SPANNER**

A 'Dodgem' in Meccano

The complete Dodgem Car and Track described in this article. Elektrikit parts enable power for the Emebo Motor in the car to be picked up in a realistic manner.

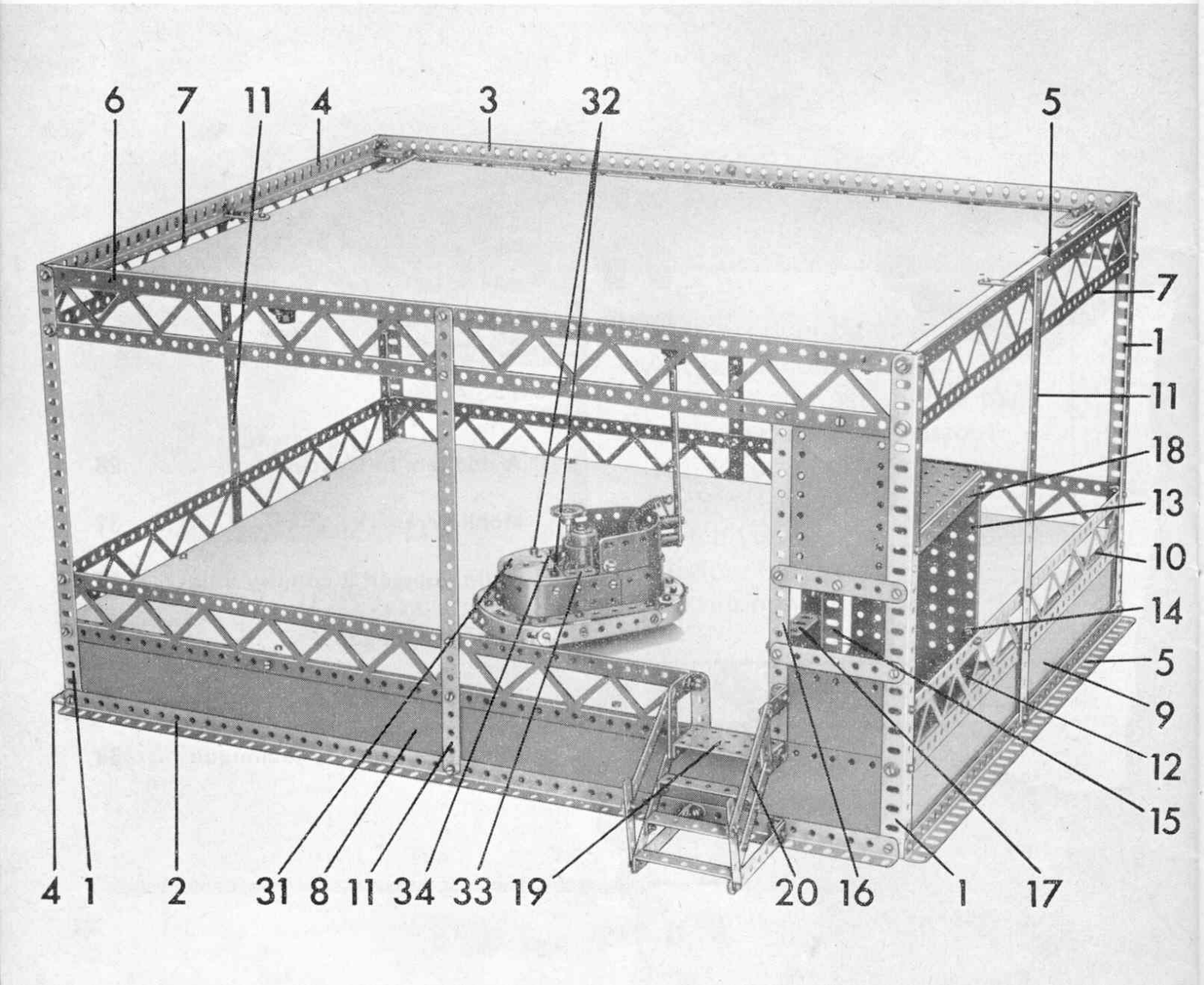

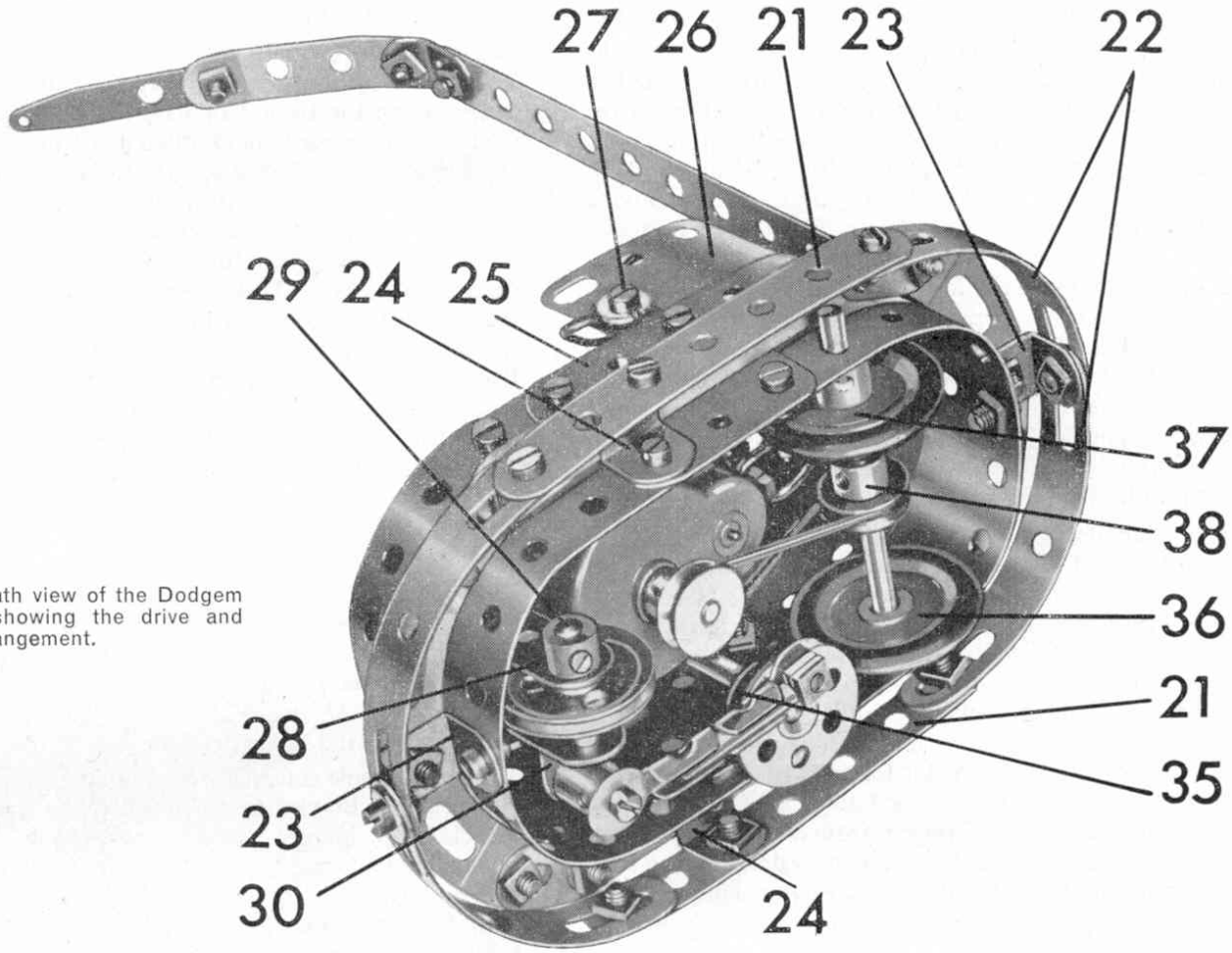

An underneath view of the Dodgem Car itself, showing the drive and steering arrangement.

ALL OF us, at some time or another, have experienced the thrills and excitement of the fairground—either at a permanently sited, giant amusement park, or among the stalls of a small travelling fair. In these pages last month we featured a monster roundabout of the type found only at established amusement parks, but this month we have an attraction without which no fair would be complete, the Dodgem. The floor and roof are made of sheet metal, obtainable from most hardware dealers, yet this can be replaced by a variety of other things. Tin foil attached to a sheet of cardboard makes a good—and cheap—substitute as also does small-aperture wire netting, or the fine gauze often found in food safes and fireguards.

As in the case of the roundabout described last month, this model has been devised to incorporate some Elektrikit parts.

The track housing is built up from a basic 'box' framework of Girders composed of two rectangles joined together at the corners by 12½ in Angle Girders 1. Each rectangle is made by joining together two 24½ in Angle Girders 2 and 3 with 18½ in Angle Girders 4 and 5. When the two rectangles are connected the two 12½ in Angle Girders 1 also hold in position, at the top, two 24½ in compound Braced Girders 6 and two compound 18½ in Braced Girders 7. The 24½ in lengths are made up from two 12½ in Braced Girders, whilst the 18½ in lengths incorporate two 9½ in Braced Girders. At their other ends, Girders 1 have two 24½ in by 2½ in and two 18½ in by 2½ in compound Strip Plates 8 and 9 bolted to them. Plates 8 comprise two 12½ in by 2½ in Strip Plates, whereas Plates 9 are built up from two 9½ in by 2½ in Strip Plates. The upper bolts holding Plates 8 and 9 in place also hold a third 24½ in by 18½ in rectangle 10, constructed in a similar manner to the other two, in position. The horizontal flanges of the Angle Girders, used in this rectangle, are uppermost.

The whole framework is braced by four 12½ in Strips 11, and Braced Girders are bolted, as shown, to form handrails.

A 3½ in Flat Girder is attached to rectangle 10 by Bolt 12, this Bolt also helping to hold a 5½ in by 3½ in Flat Plate in position. The Flat Plate is bolted through its three remaining corners to the rectangle 10 and the Flat Girder. In addition, this last bolt fixes an Angle Bracket to the upper face of the Flat Plate.

The pay-box is now constructed, using the Flat Plate as the floor. Another 5½ in by 3½ in Flat Plate 13 is bolted to the Angle Bracket fixed to the Flat Plate forming the floor and to a further Angle Bracket 14 fixed to the hand-rail. The doorpost is a 5½ in Angle Girder 15 connected to an Angle Bracket bolted through the fifth hole from the end, along the edge of the floor Plate. A 5½ in by 1½ in Flexible Plate overlayed by a 5½ in Strip is fixed to

the Girder 15. Another 9½ in Angle Girder is bolted to the 9½ in Strip 16 connecting Braced Girder 6 and the middle rectangle of Girders. A 3½ in Strip is bolted to this Angle Girder and to Angle Girder 15 through the fifth holes from their lower ends. The resulting space beneath this Strip is filled in with a 3½ in by 2½ in Flexible Plate. A 3½ in Strip forms the remaining window frame and a small counter is added by bolting a 1½ in Angle Girder 17 to the horizontal 3½ in Strip. A final 5½ in Angle Girder 18 connects an Angle Bracket, bolted to Plate 13, to the Angle Girder 1 and a last 5½ in by 3½ in Flat Plate is fixed to this, and a corresponding Angle Girder at the other top corner of Plate 13, thus completing a roof. The remaining space between Angle Girder 1 and Strip 16 is covered by a 3½ in by 2½ in and a 4½ in by 2½ in Flexible Plate, except for a window that is edged by two 3½ in Strips, as shown.

The track itself is made of sheet metal or a suitable substitute, cut to size and bolted direct to the flanges of the Girders comprising the rectangle 10. The roof is also sheet metal, but it is cut so that it will fit inside the top rectangle of Girders without touching any of them. It is held in place by Insulating Strips and Insulating Fishplates from an Elektrikit outfit, so that, electrically speaking, it is completely isolated from the metal of the rest of the model. Elektrikit Lamp Holders also help to hold the rod in position and if Lamps are fitted in these, they will light up. If power from a battery is used, however, you may find that the Lamps drain this to such an extent that the car will not operate satisfactorily.

A set of steps is built, using a 2½ in by 1½ in Flanged Plate 19, four 3½ in Strips, three 2 in Strips, and two 2½ in Narrow Strips. Each handrail consists of a 3½ in Narrow Strip 20, and a 1½ in Strip joined to the model by an Angle Bracket. The Flanged Plate 19 is joined to the model, proper, by Angle Brackets, and the actual steps are 2½ in by ½ in Double Angle Strips.

Turning, now, to the car itself, the chassis, which also serves as a bumper, consists of two 3½ in Strips 21, joined at each end by two Formed Slotted Strips 22. Four Double Brackets 23 and 24 are bolted to the resulting oval, as shown. To the top of both Brackets 23, a 3 in Stepped Curved Strip is fixed, and to the top of both Brackets 24, a 3½ in Strip is bolted through the third hole. The Strips and Curved Strips are joined by Fishplates.

Another oval is formed by bolting two 5½ in by 1½ in Flexible Plates and two 1½ in by 1½ in Flat Plates 25 to the free, inside lugs of the Double Brackets. The back, a further 5½ in by 1½ in Flexible Plate 26, is then fixed in place and is strengthened by a 2½ in by ½ in Double Angle Strip held by Bolt 27 to each side. A 1 in by ½ in Angle Bracket is bolted to the front Flexible Plate, the bolt passing through the centre hole of the Plate, and the smaller lug of the Angle Bracket. A 1 in by ½ in Double Bracket 28 is lock-nutted through the outer hole in the larger lug of this Angle Bracket and a 1 in Rod 29, carrying a 1 in loose Pulley, is journalled in the end holes of its lugs. The Pulley, positioned between the lugs, is held in place by two Collars. An Angle Bracket 30, with a Threaded Boss attached to one lug, is bolted to the right-hand lug of Double Bracket 28. A Rod and Strip Connector is pivotally fitted to the other end of the Threaded Boss and this is joined to a further Rod and Strip Connector by a 1 in Rod. This Rod and Strip Connector is, in turn, lock-nutted to a 1 in diameter Bush Wheel (Elektrikit Part No. 518) fitted on the end of a 2½ in Rod forming the steering column. Three Angle Brackets are bolted to the front 5½ in by 1½ in Double Angle Strip and these form the supports for a Semi-Circular Plate 31. The rear two Bolts 32 holding this Plate in position also hold 1½ in Strips 33 and 34 between the lugs of the Angle Brackets and the Semi-Circular Plate. The Strips point rearwards with the Bolts passing through their first holes. The steering column is journalled in the last hole of Strip 34 and in an Angle Bracket 35, attached to the side of the car. It is held by a Collar at the top whilst the steering wheel is a 1 in Pulley with boss.

A 3 in Rod carrying two 1 in Pulleys with Rubber Rings 36 and 37, and a ½ in fixed Pulley 38, forms the rear axle. Pulley 36 is fixed on the Rod, but 37 is loose, being held against the side by a Collar. An Emebo Motor is bolted, as shown, to the Double Angle Strip held by Bolts 27 and a 2½ in Driving Band connects a ½ in Pulley on the Motor to Pulley 38 on the rear axle.

The pick-up pole consists of a 5½ in Strip extended by an Obtuse Angle Bracket to which is bolted a 2 in laminated flexible strip, in turn extended by a 1½ in Wiper Arm (Elektrikit Part No. 532). The laminated strip is built up from two 2 in Flexible Strips (Elektrikit Part No. 530). Two Insulating Spacers (Elektrikit Part No. 564) are bolted through the bottom two holes of the 5½ in Strip, and these are attached to the 5½ in by 1½ in Flexible Plate 26 by another two bolts.

One Motor lead is taken to one of the bolts fixing the 5½ in Strip to the Insulating Spacer, care being taken that no electrical contact is made with the car proper. The other lead is 'earthed', i.e., an electrical contact is made with the car. In our model this lead is taken to Bolt 27. Before making any connections, however, it is best to coil the loose wire, as shown in the main illustration, to save space.

Parts required.—4 of No. 1; 1 of No. 1a; 1 of No. 2; 12 of No. 3; 3 of No. 6; 4 of No. 6a; 6 of No. 7; 6 of No. 7a; 4 of No. 8; 4 of No. 9; 1 of No. 9f; 4 of No. 10; 4 of No. 11; 1 of No. 11a; 16 of No. 12; 1 of No. 12b; 1 of No. 12c; 1 of No. 16a; 1 of No. 16b; 2 of No. 18b; 3 of No. 22; 1 of No. 22a; 1 of No. 23a; 194 of No. 37a; 182 of No. 37b; 25 of No. 38; 4 of No. 48a; 1 of No. 51; 3 of No. 52a; 4 of No. 59; 1 of No. 64; 2 of No. 74; 2 of No. 89a; 7 of No. 99; 8 of No. 99a; 1 of No. 99b; 1 of No. 103c; 17 of No. 111c; 2 of No. 135; 1 of No. 186; 4 of No. 189; 2 of No. 190a; 1 of No. 191; 1 of No. 193b; 4 of No. 196; 4 of No. 197; 2 of No. 212; 1 of No. 214; 4 of No. 215; 2 of No. 235; 2 of No. 235b; 2 of No. 502; 2 of No. 503; 2 of No. 513; 1 of No. 518; 2 of No. 530; 1 of No. 532; 4 of No. 539; 2 of No. 564: 1 Emebo Motor.