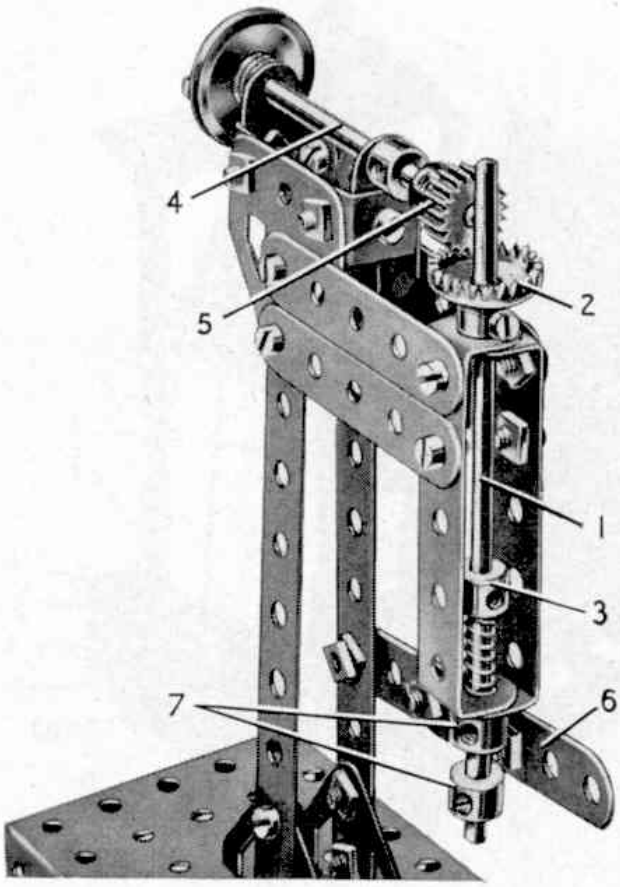

Fig. 3. An application of the Rod with Keyway to form the drill spindle of a model drilling machine. By its use the spindle is free to rise and fall without interruption to the drive.

the Gear or Pinion turns with the Rod. Several applications of the Rod with Keyway are shown in the Gears Outfit "B" Instructions Book and three examples are shown in Figs. 2, 3 and 4 on these pages.

Fig. 2, from the Instructions Book, illustrates how to build with the gears in the Outfit a Twin Drive Unit that will be found useful in many models such as cranes, in which it is necessary to drive two separate movements from a single Motor. With this mechanism a drive can be transmitted to two shafts, either independently or together; and one of these shafts can be used to operate the hoisting movement of a crane, while the other controls raising and lowering of the jib.

The second mechanism, also taken from the Instructions Book, shows how a drive can be transmitted to a Rod that must be free to slide in its bearings. This particular example is a drive to the shaft of a model drill, and shows how the Rod with Keyway and the Key Bolt enable the shaft to be raised or lowered without affecting the drive.

The gear-box for model vehicles shown in Fig. 4 has been designed as a further example of the way in which the new Rod with Keyway can be used with standard Meccano gears in the assembly of compact mechanisms of various kinds. This gear-box provides three forward speeds and a reverse drive, and it requires a few gears in addition to those contained in the Gears Outfit "B." It serves to illustrate how easily the new parts can be used not only with the parts in the Gears Outfit but with other parts in the Meccano System.

Referring to Fig. 4 the gear-box input shaft is a Rod 1 that carries a ½" Pinion in constant mesh with a 57-tooth Gear on a Rod with Keyway 2. The other gears on the Rod with Keyway are free to slide but they are made to turn with the Rod by Key Bolts screwed into their bosses. The sliding gears are grouped in pairs, and each pair is linked by connecting arms to a selector shaft. The sliding gears can be moved into mesh with corresponding gears on the output shaft 3. The movement of the selector shafts is controlled by the gear lever 4, which is universally mounted.

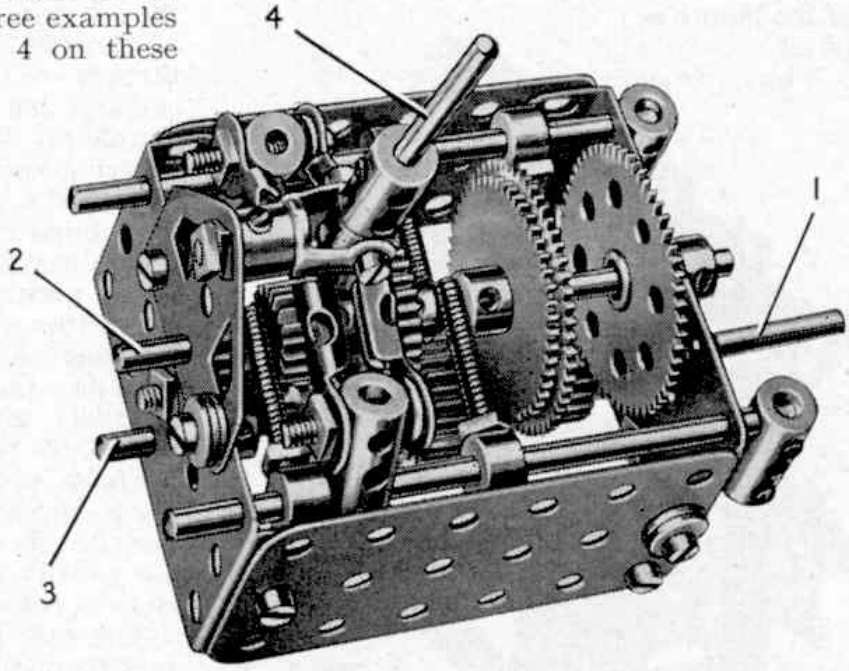

Fig. 4. One of the most useful applications of the Rod with Keyway is to be found in gear-boxes. It is used in this three-speed and reverse example, and helps in keeping it compact.

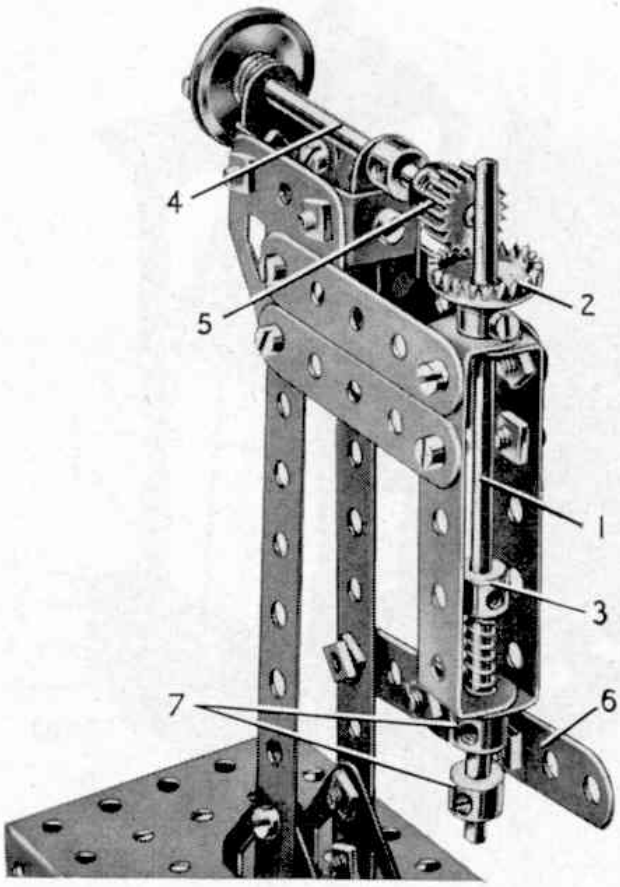

Fig. 3. An application of the Rod with Keyway to form the drill spindle of a model drilling machine. By its use the spindle is free to rise and fall without interruption to the drive.

the Gear or Pinion turns with the Rod. Several applications of the Rod with Keyway are shown in the Gears Outfit "B" Instructions Book and three examples are shown in Figs. 2, 3 and 4 on these pages.

Fig. 2, from the Instructions Book, illustrates how to build with the gears in the Outfit a Twin Drive Unit that will be found useful in many models such as cranes, in which it is necessary to drive two separate movements from a single Motor. With this mechanism a drive can be transmitted to two shafts, either independently or together; and one of these shafts can be used to operate the hoisting movement of a crane, while the other controls raising and lowering of the jib.

The second mechanism, also taken from the Instructions Book, shows how a drive can be transmitted to a Rod that must be free to slide in its bearings. This particular example is a drive to the shaft of a model drill, and shows how the Rod with Keyway and the Key Bolt enable the shaft to be raised or lowered without affecting the drive.

The gear-box for model vehicles shown in Fig. 4 has been designed as a further example of the way in which the new Rod with Keyway can be used with standard Meccano gears in the assembly of compact mechanisms of various kinds. This gear-box provides three forward speeds and a reverse drive, and it requires a few gears in addition to those contained in the Gears Outfit "B." It serves to illustrate how easily the new parts can be used not only with the parts in the Gears Outfit but with other parts in the Meccano System.

Referring to Fig. 4 the gear-box input shaft is a Rod 1 that carries a ½" Pinion in constant mesh with a 57-tooth Gear on a Rod with Keyway 2. The other gears on the Rod with Keyway are free to slide but they are made to turn with the Rod by Key Bolts screwed into their bosses. The sliding gears are grouped in pairs, and each pair is linked by connecting arms to a selector shaft. The sliding gears can be moved into mesh with corresponding gears on the output shaft 3. The movement of the selector shafts is controlled by the gear lever 4, which is universally mounted.

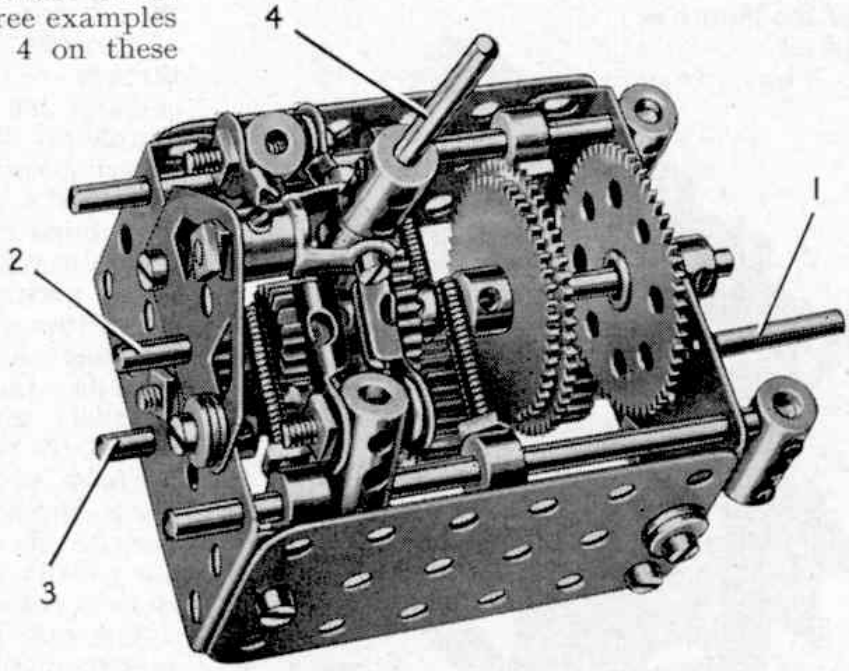

Fig. 4. One of the most useful applications of the Rod with Keyway is to be found in gear-boxes. It is used in this three-speed and reverse example, and helps in keeping it compact.