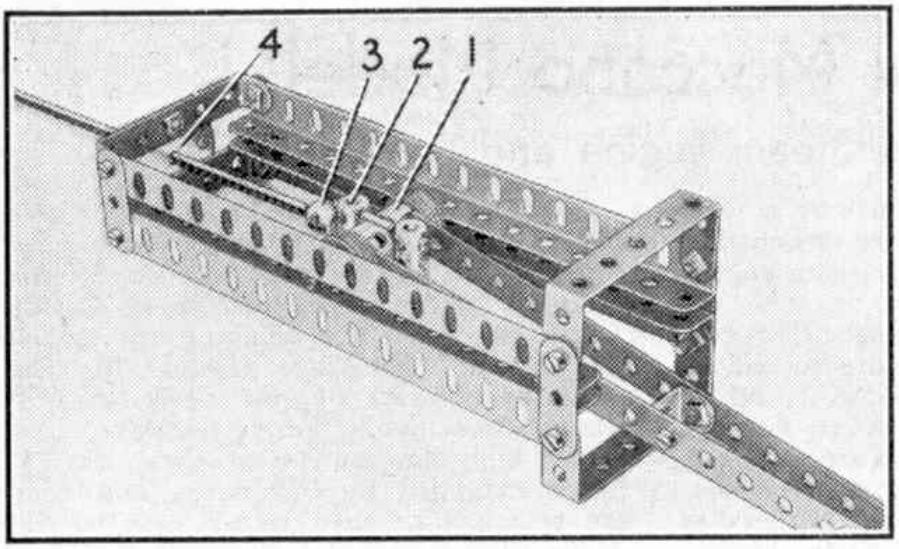


**Fig. 2. One of many methods of constructing a crosshead and slide bars for a model steam engine.**

designed for use in models such as mobile cranes, where a single motor mounted in the chassis is used to operate the luffing and hoisting movements as well as the movements of the crane itself. The drive to the gear-box is transmitted from the motor through a Rod mounted in the centre of the bearing that supports the crane.

The mechanism is housed in a framework formed by two $3\frac{1}{2}'' \times 2\frac{1}{2}''$ Flanged Plates and two $2\frac{1}{2}'' \times 2\frac{1}{2}''$ Flat Plates. These are bolted to $1'' \times \frac{1}{2}''$ Angle Brackets fixed to $7\frac{1}{2}''$ Angle Girders 1, which are then attached to the sides of the crane cab. A Ball Race Flanged Disc 2 is also fixed to the Angle Girders, and forms the upper member of the crane bearing.

The input shaft is mounted in the Ball Race Flanged Disc and in a $2\frac{1}{2}'' \times \frac{1}{2}''$ Double Angle Strip fixed between the sides of the framework. The shaft carries a $\frac{3}{4}''$ Contrate 3, and two $\frac{3}{4}''$ Pinions 4 are fixed on a shaft 5 so that either can be moved into mesh with the Contrate to provide forward and reverse drives. Movement of the shaft is controlled by a lever 6 that engages between a $\frac{1}{2}''$ Pulley and a Collar on shaft 5.

Rod 7 forms the hoisting drum and it carries a 1″ Pulley 8 and a 50-tooth Gear 9. The Cord winds between the Pulley and the Gear. A lever 10 carries a $\frac{1}{2}''$ Bolt that engages between 1″ Pulleys on Rod 7, so that by operating the lever the Gear 9 is moved into mesh with its $\frac{3}{4}''$ Pinion. A $\frac{3}{8}''$ Bolt screwed in Pulley 8 engages a Bolt in the housing when the Gear is disengaged and provides an automatic brake.

The luffing drum is identical to the hoisting drum in arrangement and operation. The levers controlling all the movements are pivoted on a common shaft 11 which is mounted in Flat Trunnions bolted to Girders 1.

### Bending and Using Flexible Plates

The Flexible Plates of various sizes that are included in Meccano Outfits are very useful for filling-in purposes in built-up structures. The Plates can be bent quite easily with the fingers, but right angles should be avoided whenever possible. If a complete cylinder is required the Plate or Plates should be rolled around a wooden former of suitable diameter, or shaped gradually between the fingers, care being taken to avoid sharp angles at the edges of the Plate adjacent to the holes.

After use the Plate can be re-straightened first with the fingers, and then placed between two flat pieces of wood and tapped gently with a mallet.

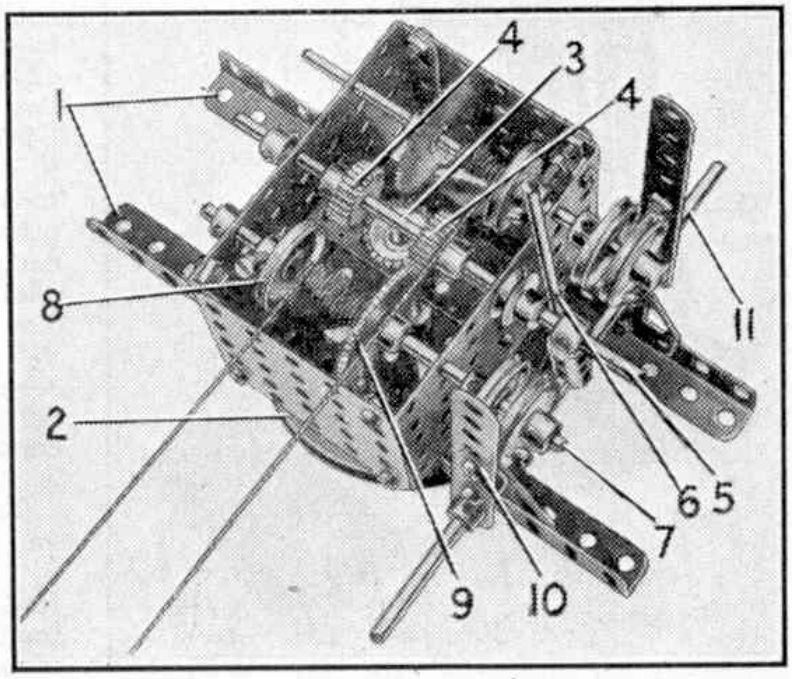


**Fig. 3. A simple gear-box suitable for transmitting a drive to the chassis of a mobile crane and also operating the hoisting movements.**