MODEL OF THE MONTH

Electric Mobile Crane

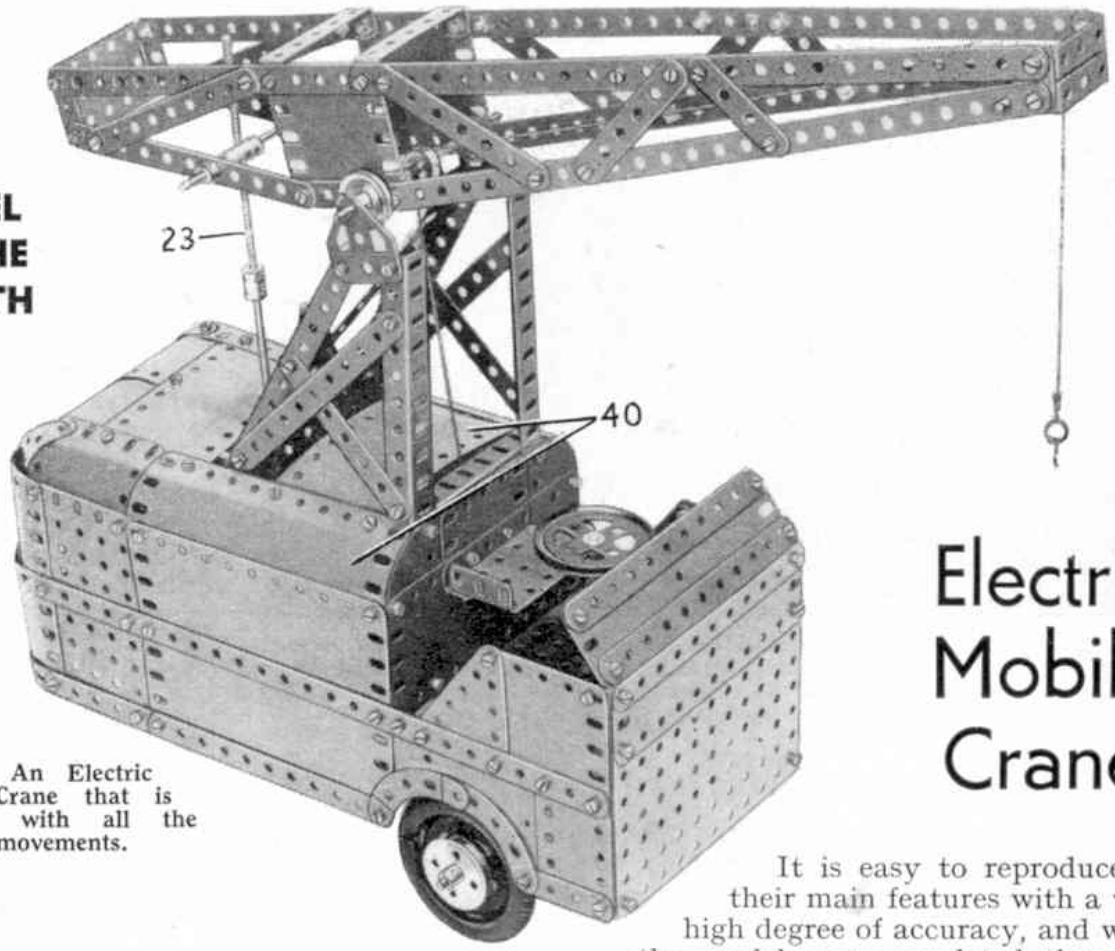

Fig. 1. An Electric Mobile Crane that is equipped with all the essential movements.

CRANES are among the most apt of all subjects for reproduction in Meccano. It is easy to reproduce all their main features with a very high degree of accuracy, and when the models are completed they can readily be set to work just like the real things and will carry out all their essential movements. The result is that a good Meccano crane is a lovely piece of work in both

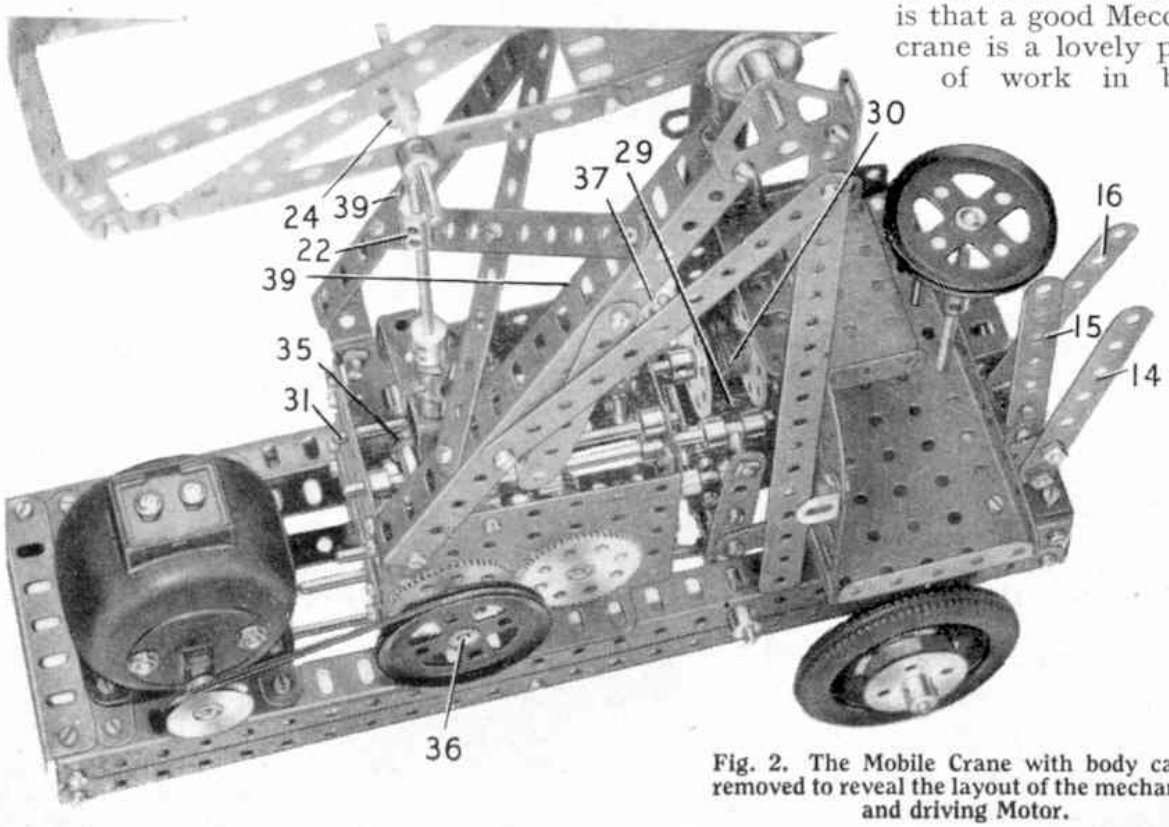

Fig. 2. The Mobile Crane with body casing removed to reveal the layout of the mechanism and driving Motor.

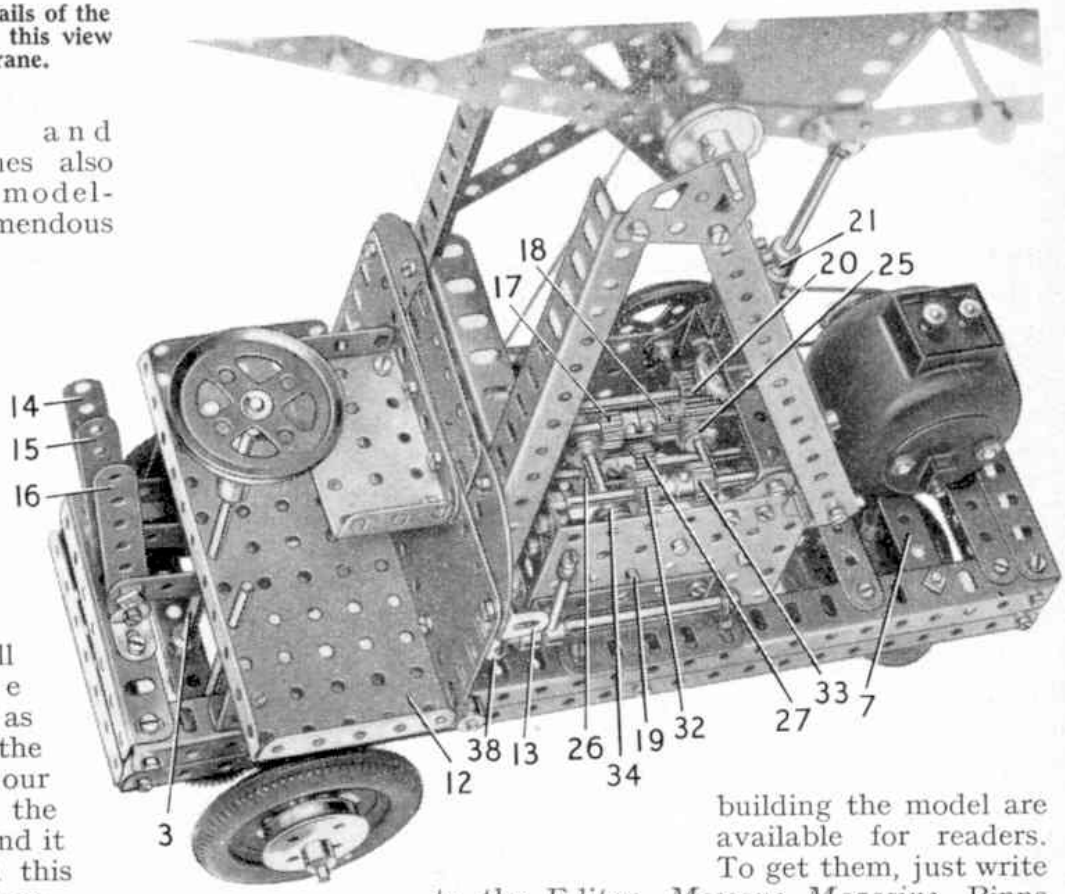

Fig. 3. The chief details of the gear-box are seen in this view of the Mobile Crane.

appearance and operation. Cranes also provide the model-builder with tremendous scope for using gearing, and any model that gives this facility is bound to be popular with Meccano enthusiasts, who love to watch the wheels go round!

In view of all this we have chosen a crane as the subject for the second model in our new "Model of the Month" series, and it is illustrated on this and the facing page.

The model is based on a crane of a popular mobile type that is used in works and industries of all kinds for carrying crates and goods from one department to another.

As usual full constructional details for building the model are available for readers. To get them, just write to the Editor, *Meccano Magazine*, Binns Road, Liverpool 13, enclosing a 2d. stamp. Readers living in Canada, Australia, New Zealand, South Africa, Ceylon, Italy, Rhodesia and the United States of America, should write to our main agents in those countries for their copies of the current Model of the Month instructions, also, of course, enclosing suitable stamps for postage.

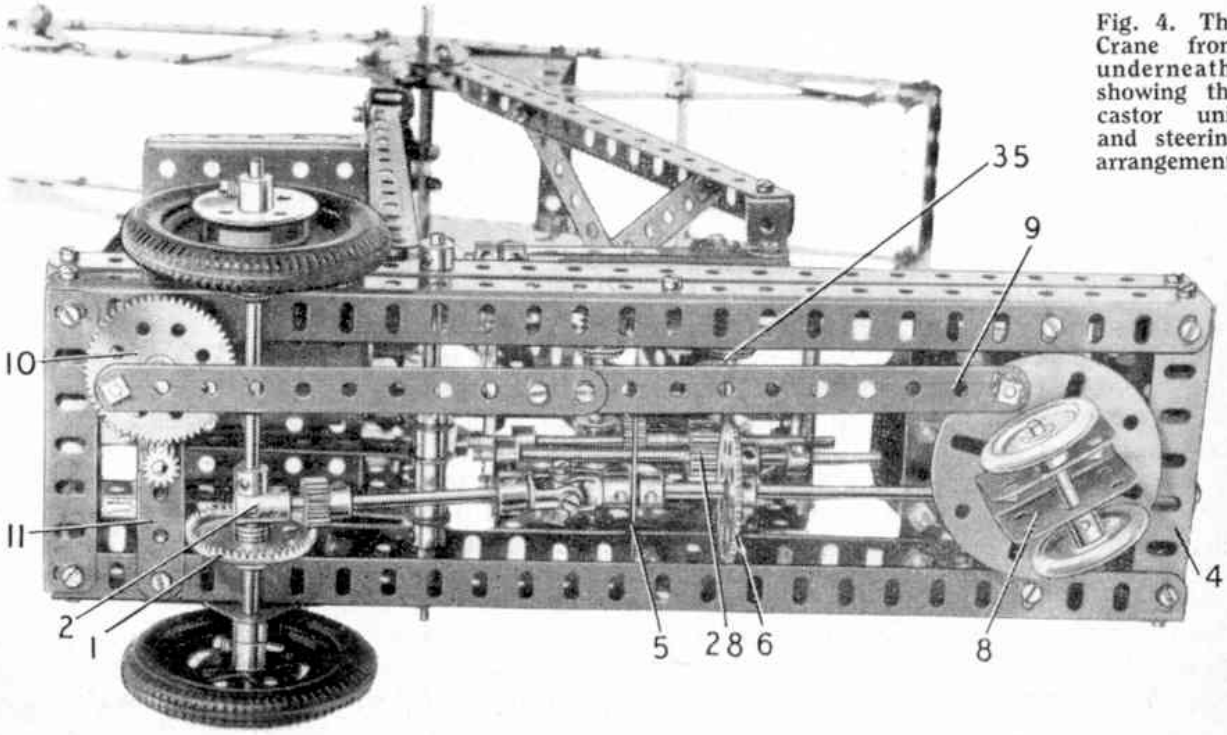

Fig. 4. The Crane from underneath, showing the castor unit and steering arrangement.

MODEL OF THE MONTH.

MOBILE CRANE.

Illustrated in the December, 1958, issue of the Meccano Magazine.

Construction of the Chassis.

Each side of the chassis is made up from two 12½" Angle Girders joined together at each end by Fishplates. The sides are then connected together at each end by 3½" Angle Girders. The front wheel axle, a 6½" Rod, is mounted in two Trunnions bolted to the sides of the chassis and carries a 1½" Contrate 1 and a Short Coupling 2, which is free on the shaft and is spaced from the Contrate by three Washers. A Collar is used to retain the Coupling in place.

The road wheels are 2" Pulleys fitted with Tyres, and 1⅛" Flanged Wheels are used to form hub caps.

A 6½" Rod is mounted in a hole of the 3½" Angle Girder 4 and in a 3½" x ½" Double Angle Strip 5 bolted across the chassis in the position shown in the illustrations. This Rod carries a 57-teeth Gear 6 and at its inner end is joined by a Universal Coupling to a 2" Rod that carries a ½" Pinion that meshes with Contrate 1 and is journalled at its front end in the longitudinal bore of the Short Coupling mounted on the front axle.

The rear wheels are mounted in a pivoted castor unit that is steerable from the cab. The castor is mounted on a 1½" Rod that is journalled in the 3½" Strip 7 and in a similar Strip bolted across the lower 12½" Angle Girder of the chassis.

The castor unit itself consists of a Channel Bearing 8 bolted to a Face Plate fixed on the 1½" Rod already mentioned. The wheels are 1" Pulleys with Rubber Rings and are fixed on a 1½" Rod passed through the Channel Bearing. A made-up strip 9 consisting of two 5½" Strips overlapped two holes serves to connect the Face Plate of the castor unit to a 57-teeth Gear 10 mounted on the lower end of the steering column 3. The latter is a 4½" and a 1½" Rod joined by a Short Coupling, and is mounted in a 3½" Strip 11 and in a hole in the 5½" x 2½" Flanged Plate 12 that forms the floor of the driving cab. The back of the cab consists of a 2½" x 5½" Flexible Plate, a 2½" x 1½" Flexible Plate and two Semi-Circular Plates. It is important to note that at the back of the 2½" x 5½" Flexible Plate an Angle Bracket 13 is bolted on each side. These are used for attaching the body as explained later.

The Mechanism.

The crane has the following movements: raising and lowering of the jib, controlled by lever 14, raising and lowering of the load, controlled by lever 15, and a reversible travelling movement along the ground, controlled by lever 16.

The mechanism that operates these movements is housed in a casing formed by two $3\frac{1}{2}$" x $2\frac{1}{2}$" Flanged Plates connected at each end by two $2\frac{1}{2}$" Strips bolted in the top two holes of their flanges, and by a further two $2\frac{1}{2}$" Strips bolted in the bottom two holes.

Lever 14 is lock-nutted to a Double Bracket, which is bolted to the upper $3\frac{1}{2}$" Angle Girder at the front of the chassis, and a $4\frac{1}{2}$" Strip is attached by lock-nuts to the lever. The other end of the $4\frac{1}{2}$" Strip is lock-nutted to a Crank. The boss of the Crank is mounted freely on a $4\frac{1}{2}$" Rod so that it is free to swivel. A $2\frac{1}{2}$" Strip is bolted to the Crank in such a manner that the Rod passes through the end hole of the Strip. A $\frac{3}{8}$" Bolt in the other end hole of the $2\frac{1}{2}$" Strip engages between two Collars fixed on a sliding Rod journalled in the side of the mechanism casing. Also mounted on the Rod are two $\frac{1}{2}$" Pinions 17 and 18. When the lever 14 is moved forward the Pinion 17 engages with a Worm mounted on a $4\frac{1}{2}$" Rod 19. The rear Pinion 18 is in constant mesh with a $\frac{1}{2}$" diam. $\frac{1}{2}$" face Pinion 20. This Pinion engages with a $\frac{3}{4}$" Contrate that is mounted on a $1\frac{1}{2}$" Rod. The $1\frac{1}{2}$" Rod is journalled in a $2\frac{1}{2}$" x 1" Double Angle Strip and a Double Bent Strip as shown and it is connected to a 3" Rod by a Universal Coupling 21. A Short Coupling 22 is fixed at the top of the 3" Rod and a 5" Screwed Rod 23 is held in the Short Coupling. The Screwed Rod passes through the centre transverse bore of a Coupling 24 that is held on two 2" Rods mounted in the sides of the jib.

With the lever 14 in the forward position the jib is raised. Movement of the lever to the rear causes the jib to be lowered due to Pinion 18 being brought into mesh with the Worm 25.

Lever 15 is similar in construction to lever 14 except that the $4\frac{1}{2}$" Strip is lock-nutted to the lower hole of a Crank. A bolt fastened in the slotted hole of the Crank engages between two Collars mounted on a Rod journalled in the mechanism casing. Two Pinions 26 and 27 are also mounted on the Rod and when the lever 15 is pulled forward the Pinion 26 is driven by one of two Worms that are fixed on Rod 19. Pinion 27 is in constant engagement with a $\frac{1}{2}$" diam. $\frac{1}{2}$" face Pinion 28 which drives the 57-teeth Gear 6. Thus the vehicle is driven in a forward direction. When the lever is pulled backward the action is reversed.

The arrangement of lever 16 is similar to that of the other two and the $4\frac{1}{2}$" Strip is lock-nutted to a Crank to which is bolted a 2" Strip. A Fishplate 29 is bolted to the top of the 2" Strip and engages between the ends of a winding drum 30 consisting of two Bush Wheels arranged boss to boss on a sliding Rod 31 as shown. Also mounted on the Rod are two $\frac{1}{2}$" Pinions 32 and 33.

When the lever 16 is moved forward the Fishplate 29 bears against the winding drum and slides the Rod longitudinally, thus bringing a Pinion 32 into engagement with a Worm 34 mounted on the Rod 19, and the cord is paid out. When the lever is moved rearward the other Pinion 33 engages with a Worm 35 mounted on the input shaft 36.

A brake is provided by a Collar 37 pressing against the winding drum 30. It consists of a 3½" Rod mounted in the lugs of a 2½" x ½" Double Angle Strip. The 3½" Rod passes through the longitudinal bore of the Coupling 38 in which is held a 1" Rod. The Collar 37 is mounted on this 1" Rod. A 1⅛" Bolt held in a Collar mounted on the 3½" Rod, is held by elastic against the side of the 3½" x 2½" Flanged Plate so that the Collar 37 presses against the winding drum.

The Motor used in thismodel is an E020(S) Electric non-reversing Motor.

The Jib and its Supporting Framework.

The supporting tower for the jib is made up of two 9½" Angle Girders bolted to the rear flange of the Flanged Plate that forms the floor of the cab. These two Angle Girders are joined together by a 3½" Angle Girder and they are also connected by Trunnions to a pair of 7½" Angle Girders 39 arranged as shown. Two crossed 5½" Strips brace the framework at the rear, and to each side a 5½" and a 3½" Strip is bolted.

The top of the jib consists on each side of two pairs of 12½" Strips bolted together overlapping eleven holes to form a built up strip 19½" long. The two pairs of 12½" Strips are connected at the jib head by a 1½" x ½" Double Angle Strip, and the bolts hold also Fishplates. The 19½" built up strips are spaced apart by two 2½" x ½" Double Angle Strips. Each side of the lower jib member consists of a 12½", 2½" and a 5½" Strip. They are joined at the jib head by a 1½" x ½" Double Angle Strip, the holding bolts passing also through the free holes of the Fishplates. At the rear the sides of the jib are spaced apart by a 2½" x 1½" Flanged Plate. The jib is braced by Strips of various sizes arranged as indicated.

The jib pivots on a 5" Rod mounted in the Flat Trunnions at the top of the framework and is held in position by two 1" Pulleys. A ½" loose Pulley is also mounted on the Rod and is kept in a central position by Spring Clips. A 1" loose Pulley is mounted on a 2" Rod at the jib head. The Rod is held in place by Spring Clips.

The Bodywork.

The bodywork of the model is made up of Flexible Plates, Flat Plates and Triangular Flexible Plates of various sizes and its details can be seen in the main illustration.

The body should be built up as a separate unit and then bolted in place on the chassis after the latter is completed. It should be noted however that to enable the body to be manoeuvered into position the Plates 40 should be added afterwards.

The body when in position is bolted to the Angle Brackets 13 fixed at the back of the cab on each side and is also bolted to the rear of the chassis.

Parts required to build the Mobile Crane:-

8 of No. 1; 14 of No. 2; 5 of No. 2a; 11 of No. 3; 2 of No. 4; 11 of No. 5; 5 of No. 6; 4 of No. 8; 2 of No. 8a; 2 of No. 8b; 2 of No. 9a; 5 of No. 9b; 3 of No. 9d; 7 of No. 10; 1 of No. 11; 3 of No. 12; 2 of No. 12c; 2 of No. 14; 3 of No. 15; 4 of No. 15a; 1 of No. 15b; 3 of No. 16; 1 of No. 16a; 2 of No. 16b; 2 of No. 17; 5 of No. 18a; 1 of No. 18b; 2 of No. 20; 4 of No. 20a; 5 of No. 22; 1 of No. 22a; 1 of No. 23; 2 of No. 24; 7 of No. 26; 2 of No. 26a; 1 of No. 26c; 4 of No. 27a; 1 of No. 28; 1 of No. 29; 4 of No. 32; 4 of No. 35; 234 of No. 37a; 220 of No. 37b; 15 of No. 38; 1 of No. 40; 1 of No. 45; 1 of No. 46; 2 of No. 48; 3 of No. 48a; 1 of No. 48b; 2 of No. 51; 1 of No. 52; 1 of No. 52a; 2 of No. 53; 2 of No. 53a; 1 of No. 57c; 28 of No. 59; 3 of No. 62; 2 of No. 63; 3 of No. 63d; 1 of No. 80b; 4 of No. 90a; 1 of No. 109; 3 of No. 111c; 1 of No. 111d; 4 of No. 124; 2 of No. 125; 4 of No. 126a; 2 of No. 133a; 2 of No. 140; 2 of No. 142a; 2 of No. 155; 1 of No. 160; 1 of No. 186; 1 of No. 186a; 4 of No. 188; 4 of No. 189; 4 of No. 190; 2 of No. 191; 9 of No. 192; 1 of No. 198; 6 of No. 200; 2 of No. 214; 2 of No. 215; 4 of No. 221; 2 of No. 222; 1 E020(S) Electric Motor.