MECCANO

AEROPLANE CONSTRUCTOR OUTFITS

Build your own model Aeroplanes!

Boys, these Aeroplane Outfits are great! They enable you to build wonderful models of aeroplanes—the most realistic you ever saw.

A beautifully illustrated Manual is included in each Outfit showing how to build a number of different types of machines, both monoplanes and biplanes. Many other splendid models may be built by varying the positions of the parts, which are all interchangeable on the famous Meccano principle. The parts in the Nos. 1 and 2 Outfits can be used in conjunction with the standard Meccano parts.

If you want to know something about aeronautics the first step is to understand how aeroplanes are designed and constructed, so that you may be able to recognise at a glance the different types. Buy an Outfit to-day!

AEROPLANE CONSTRUCTOR OUTFIT No. 0. The parts contained in this Outfit enable an interesting range of aeroplane models to be built, including low-wing monoplanes, seaplanes and standard light biplanes. All the parts are interchangeable. They are smaller than those in Outfits Nos. 1 and 2, and are not intended for use with these larger Outfits. Price **5/-**

AEROPLANE CONSTRUCTOR OUTFIT No. 1. High and low wing monoplanes may be built with this splendid Outfit, while interesting model biplanes may also be constructed. The biplanes include models based on the single-seater fighter type of military aircraft, and on the popular light aeroplane. Price **9/-**

AEROPLANE CONSTRUCTOR OUTFIT No. 2. This Outfit enables a much wider range of models to be built, including triple-engined monoplanes and biplanes, and a racing seaplane of the type that is used in the Schneider Trophy Contests. A particularly interesting model is that of a giant Italian bombing machine. Price **16/6**

The above illustration shows a model of a Biplane built with Meccano Aeroplane Constructor Outfit No. 0.

This model of a Standard Light Biplane is based on the type that is generally used for civilian flying. It is a No. 1 Outfit model.

This fine model of a triple-engined Seaplane is built with Meccano Aeroplane Constructor Outfit No. 2.

Aeroplane Constructor Outfit No. 1

MECCANO LIMITED
Old Swan, Liverpool

A New Type of Meccano Model

Aeroplane Parts and Standard Parts Combined

THE Meccano Aeroplane Constructor Outfits that were introduced last year have aroused great interest among Meccano enthusiasts, and as a result many thousands of them have become model aeronautical engineers!

The separate Aero Parts of which the No. 1 and No. 2 Aeroplane Outfits are composed are copies of actual aircraft units such as main planes, tail planes, fuselage sections, rudders, propellers, landing wheels, radial engines, struts, floats, etc. The parts are finished in aluminium lacquer and glossy enamel, and therefore the finished models possess a remarkably high degree of realism and beauty.

All the separate aero parts are interchangeable, and what is of particular interest to the Meccano model-builder is that all the parts are designed on the standard Meccano equidistant hole system. All perforations and slots cut in the parts are of standard Meccano size, as are all bosses and Rods; and therefore they may be used freely with the standard Meccano parts in the construction of special types of aeroplane models. Model-builders will find the standardisation of the Aeroplane Parts with the original Meccano system of great assistance in many instances. For example, if the aeroplane constructor runs short of Bolts when building a special model with his Aeroplane Outfit, he can quite easily fall back on the Bolts in his standard Meccano Set.

It is not, however, essential to be the owner of a complete Aeroplane Outfit in order to take advantage of the increased realism given by the use of the special parts, and in this article we intend to show how constructors owning small Meccano Outfits, Nos. 00, 0 and 1, may build realistic model aeroplanes by merely adding a few Aero Parts to their standard Sets.

The first three models shown are built with the parts contained in a standard Meccano No. 00 or No. 0 Outfit, with the addition of various Aero Parts and a few extra nuts and bolts; while the remaining three models make use of the standard parts contained in the No. 1 Meccano Outfit, together with a number of Aero Parts. The No. 00 Outfit models are arranged to show how, by gradually increasing the number and variety of the Aero Parts, the realism of the models may be increased. The No. 1 Outfit models are also arranged in progressive order, the models ranging from a simple monoplane to a realistic biplane amphibian. It should be borne in mind that the models shown in this article are merely representative of what can be done in this direction, and they in no way indicate the limits of construction. By arranging the Aero Parts and standard Meccano Parts in different combinations it is possible to build hundreds of different models, and a splendid new field is thus opened for the Meccano boy. Before going further we would mention that the complete range of separate Meccano Aeroplane Parts are now stocked by all Meccano dealers.

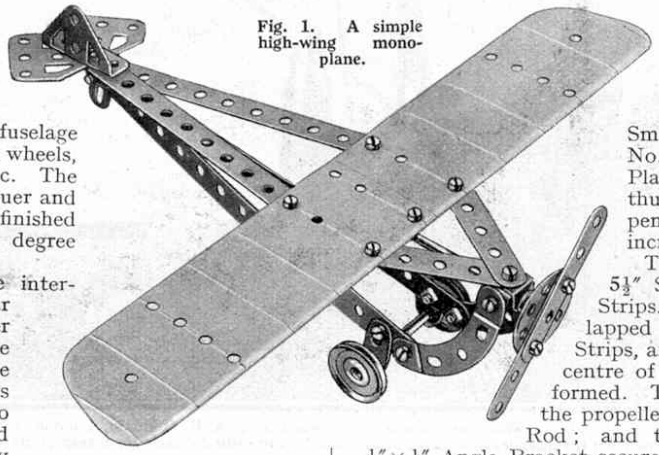

Fig. 1. A simple high-wing monoplane.

The Simple Monoplane Model

The first model illustrated is of a very simple nature, and makes use of the minimum of Aero Parts in addition to the Standard Parts contained in the No. 00 Outfit. The Aeroplane Parts used consist of one Small Right-hand Main Plane (Aero Part No. P3) and one Small Left-hand Main Plane (Aero Part No. P4). The model thus serves to show how by the expenditure of a few pence a remarkable increase in realism may be effected.

The fuselage of the model consists of $5\frac{1}{2}''$ Strips and $2\frac{1}{2}''$ Straight and Curved Strips. The Small Main Planes are overlapped and bolted in position to the top Strips, and an Angle Bracket is secured to the centre of the lower surface of the wing thus formed. This Bracket forms one bearing for the propeller shaft, which consists of a $3\frac{1}{2}''$ Axle Rod; and this Rod is supported in a second $\frac{1}{2}'' \times \frac{1}{2}''$ Angle Bracket secured to the nose of the machine. The propeller is a Bush Wheel fitted with two $2\frac{1}{2}''$ Strips. The landing wheels (1″ Pulleys) are mounted on a $3\frac{1}{2}''$ Axle Rod secured in Flat Brackets bolted to the fuselage. The tail unit consists of a Trunnion and two Flat Trunnions, and a Flat Bracket is secured to the rear of the fuselage of the model to provide a tail skid.

By making use of additional Aero Parts, the realism of the model may be still further increased. A Small Propeller (Aero Part No. P35) may be substituted for the built-up propeller shown. Rubber Tyres (Aero Part No. P44) may be fitted to the wheels, and Small Identification Discs (Aero Part No. P37) secured to the wing. A more realistic tail unit assembly may be devised from three Fuselage Sides Front sections bolted in position in place of the Meccano Trunnions shown.

The standard Meccano Parts used in this model are:—4 of No. 2; 6 of No. 5; 3 of No. 10; 4 of No. 12; 2 of No. 16; 2 of No. 22; 1 of No. 24; 1 of No. 35; 16 of No. 37; 2 of No. 90a; 1 of No. 126; 2 of No. 126a. Aeroplane Parts used:—1 of No. P3; 1 of No. P4.

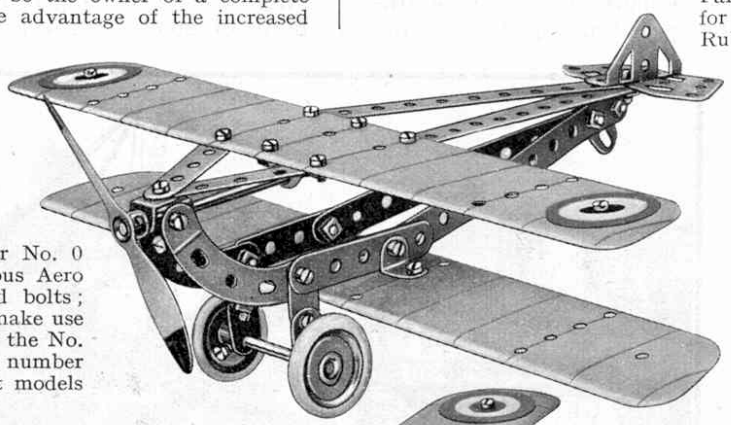

Fig. 2. Model military biplane.

A Military Biplane

The model shown in Fig. 2 is more elaborate than the monoplane just described. It represents a Service biplane, and is fitted with Identification Discs, Rubber-tyred landing wheels, and a Small Propeller (Aero Part No. P35) in place of the built-up Meccano propeller that is used in the model shown in Fig. 1.

The construction of the fuselage of the model is similar to that of the monoplane just described, with the exception that a second pair of Small Main Planes (one Right and one Left-hand) are bolted to the lower side of the fuselage by means of Angle Brackets. Each strut of the undercarriage in the model is built up from two Flat Brackets, so that the landing wheels will clear the lower plane. A further improvement in the appearance of this model can be made by using three Fuselage

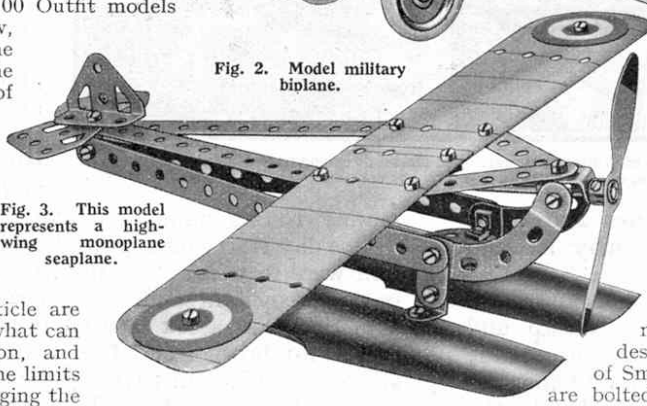

Fig. 3. This model represents a high-wing monoplane seaplane.

Sides Front (Aero Part No. P16) for the tail unit in place of the Trunnions shown fitted.

The model Military Biplane contains the following Meccano Parts :—4 of No. 2 ; 4 of No. 5 ; 5 of No. 10 ; 7 of No. 12 ; 2 of No. 16 ; 2 of No. 22 ; 1 of No. 35 ; 22 of No. 37 ; 2 of No. 90a ; 1 of No. 126 ; 2 of No. 126a. Aeroplane Parts used :—2 of No. P3 ; 2 of No. P4 ; 1 of No. P35 ; 2 of No. P37 ; 2 of No. P44.

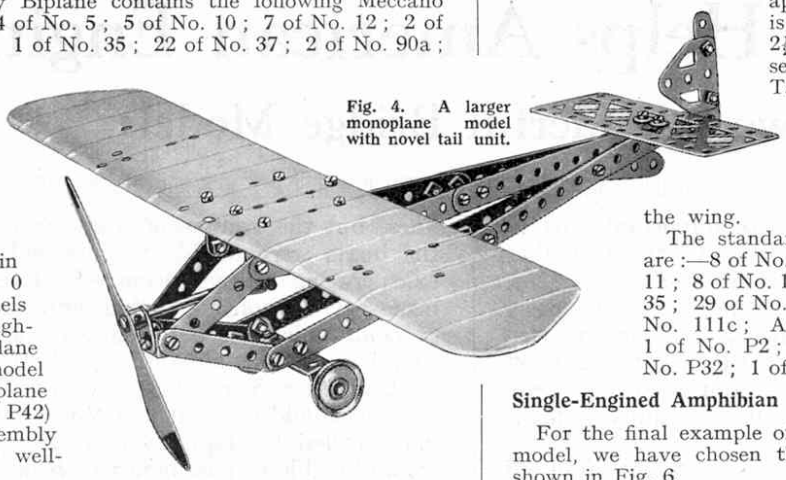

Fig. 4. A larger monoplane model with novel tail unit.

High-Wing Seaplane Model

The final example in the No. 00 or No. 0 Outfit range of models is the neat model high-wing monoplane Seaplane shown in Fig. 3. The model makes use of the Aeroplane Floats (Aero Part No. P42) and the complete assembly forms a particularly well-proportioned model.

The assembly of the Meccano Strips forming the fuselage of the model is similar to that of the model shown in Fig. 1, the method of securing the Floats only requiring any explanation. A Flat Bracket and an Angle Bracket are secured at each side of the lower portion of the fuselage and a Bush Wheel is bolted to the lugs of the Angle Brackets. Further Angle Brackets are now secured to the Flat Brackets and the Floats themselves are attached to these Angle Brackets. A Bolt is passed through the lug of each Angle Bracket and is screwed into the threaded bore that is provided in the top of each of the two Floats.

The standard Meccano Parts used in this model are :—4 of No. 2 ; 6 of No. 5 ; 2 of No. 10 ; 6 of No. 12 ; 1 of No. 16 ; 1 of No. 24 ; 1 of No. 35 ; 18 of No. 37 ; 2 of No. 37b ; 2 of No. 90a ; 1 of No. 126 ; 22 of No. 126a. Aeroplane Parts :—1 of No. P3 ; 1 of No. P4 ; 1 of No. P35 ; 2 of No. P37 ; 2 of No. P42.

From the Aeroplane models built with the No. 00 and 0 Outfits we turn to those that are constructed from the parts contained in the standard Meccano No. 1 Set. The increased number of Strips available in a No. 1 Outfit enable larger models to be built, and the Large Aeroplane Main Planes, Tail Planes and Rudder consequently may be employed.

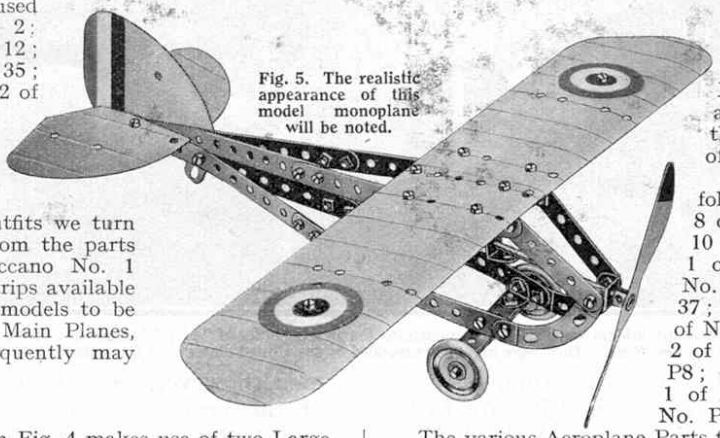

Fig. 5. The realistic appearance of this model monoplane will be noted.

High-wing Monoplane

The model monoplane shown in Fig. 4 makes use of two Large Main Planes (Aero Parts Nos. P1 and P2) and a Large Propeller (Aero Part No. P34).

The fuselage of the model is built up from eight $5\frac{1}{2}''$ and five $2\frac{1}{2}''$ Strips. The Large Right and Left-hand Main Planes (Aero Parts Nos. P1 and P2) are held to the fuselage by means of Angle Brackets and Flat Brackets, and a $1\frac{1}{2}'' \times \frac{1}{2}''$ Double Angle Strip is secured to the under side of the wing in the centre. This Angle Strip supports the propeller shaft, which is mounted in a Flat Bracket at the front of the fuselage. The tail plane consists of a $5\frac{1}{2}''$ Braced Girder held to the fuselage by means of two Angle Brackets. The Bolts holding the Girder to the lugs of the Angle Brackets are passed through the lattice openings in the Girder, and washers are placed under the heads of the Bolts so that the Girder is held rigidly. The landing wheels are mounted in a $2\frac{1}{2}'' \times \frac{1}{2}''$ Double Angle Strip secured to the fuselage by means of Angle Brackets.

In the High-wing Monoplane the following standard Meccano Parts are used :—8 of No. 2 ; 6 of No. 5 ; 5 of No. 10 ; 1 of No. 11 ; 8 of No. 12 ; 2 of No. 16 ; 2 of No. 22 ; 1 of No. 35 ; 35 of No. 37 ; 2 of No. 38 ; 1 of No. 48 ; 1 of No. 48a ; 1 of No. 100 ; 1 of No. 111c ; 1 of No. 126a. Aeroplane Parts used :—1 of No. P1 ; 1 of No. P2 ; 1 of No. P34.

A Further Monoplane Example

A second model of the monoplane type is illustrated in Fig. 5. The Aero Tail Planes and Rudder have been used to form the tail unit assembly in the model, and Identification Discs, Rubber Tyres and the Large Propeller have been fitted so that the complete model has a remarkably realistic appearance. The fuselage of the model is built up from $5\frac{1}{2}''$ and $2\frac{1}{2}''$ Strips and $2\frac{1}{2}''$ Curved Strips. The Rudder is secured to the rear $5\frac{1}{2}''$ Strips, and the Tail Planes (Right and Left-hand) are held in position by means of Angle Brackets. The propeller shaft is carried in a Double Bracket and a $1\frac{1}{2}'' \times \frac{1}{2}''$ Double Angle Strip secured to the lower side of the wing.

The standard Meccano Parts used in the model are :—8 of No. 2 ; 2 of No. 5 ; 1 of No. 10 ; 1 of No. 11 ; 8 of No. 12 ; 2 of No. 16 ; 2 of No. 22 ; 1 of No. 35 ; 29 of No. 37 ; 1 of No. 48 ; 1 of No. 48a ; 1 of No. 111c ; Aeroplane Parts used :—1 of No. P1 ; 1 of No. P2 ; 1 of No. P10 ; 1 of No. P11 ; 1 of No. P32 ; 1 of No. P34 ; 2 of No. P36 ; 2 of No. P44.

Single-Engined Amphibian

For the final example of this new type of Meccano aeroplane model, we have chosen the single-engined amphibian machine shown in Fig. 6.

The hull of the model is built up from $5\frac{1}{2}''$ and $2\frac{1}{2}''$ Strips, and the lower wing, which consists of one Right and one Left-hand Large Main Plane, is secured to the hull by means of Angle Brackets. A $2\frac{1}{2}''$ Strip is secured to the lower portion of the hull by means of Angle Brackets for bracing purposes. Six $2\frac{1}{2}'' \times \frac{1}{2}''$ Double Angle Strips are secured to the lower wing, and these support the upper wing, which consists of one Right and one Left-hand Large Main Plane and one Extension Plane (Aero Part No. P8). The Large Propeller is carried on a 2" Axle Rod mounted in a $1\frac{1}{2}'' \times \frac{1}{2}''$ Double Angle Strip bolted to the top wing. A Rudder (Part No. P32) is secured to the tail of the hull, and a Tail Plane is bolted to each side of the Rudder by means of Angle Brackets. The landing wheels are mounted on a $3\frac{1}{2}''$ Axle Rod that is journalled in the hull of the model.

The Amphibian incorporates the following standard Meccano Parts :—8 of No. 2 ; 3 of No. 5 ; 1 of No. 10 ; 1 of No. 11 ; 6 of No. 12 ; 1 of No. 16 ; 1 of No. 17 ; 2 of No. 22 ; 1 of No. 35 ; 41 of No. 37 ; 2 of No. 38 ; 1 of No. 48 ; 6 of No. 48a. Aeroplane Parts used :—2 of No. P1 ; 2 of No. P2 ; 1 of No. P8 ; 1 of No. P10 ; 1 of No. P11 ; 1 of No. P32 ; 1 of No. P34 ; 2 of No. P44.

The various Aeroplane Parts that have been used in the models illustrated in this article by no means comprise the full range of Meccano Aeroplane components, and many of the other parts in the range may be used to increase the realism of the models.

The Radial Engines (Aero Parts Nos. P43 and P46) are particularly suitable for fitting to models where radial air-cooled engines are to be represented.

In certain models the water-cooled type of engine must be represented, and in these instances the Aeroplane Engine Casing unit may be used. This unit consists of two parts, the Engine Casing Base (part No. P40) and the Engine Casing Top (part No. P41). When it is required to fit the unit to a model, the Engine Casing Base is bolted in the required position, and a small Propeller (part No. P35) is secured to the end of the Casing Base by means of a Pivot Bolt and two Nuts. The Engine Casing Top is next placed over the base piece, and a $\frac{3}{4}''$ Bolt is passed through the holes in the sides of the Top and through the perforated lug in the base piece. A Nut is then screwed on to the projecting shank of the $\frac{3}{4}''$ Bolt so that the complete Engine unit is held rigidly.

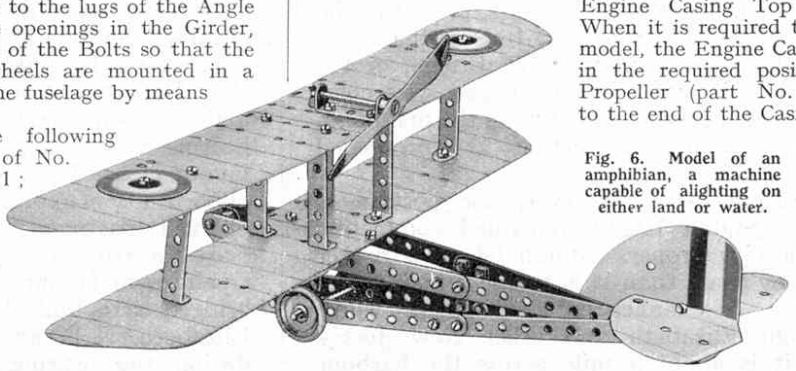

Fig. 6. Model of an amphibian, a machine capable of alighting on either land or water.