PROJECT '66

Part 2

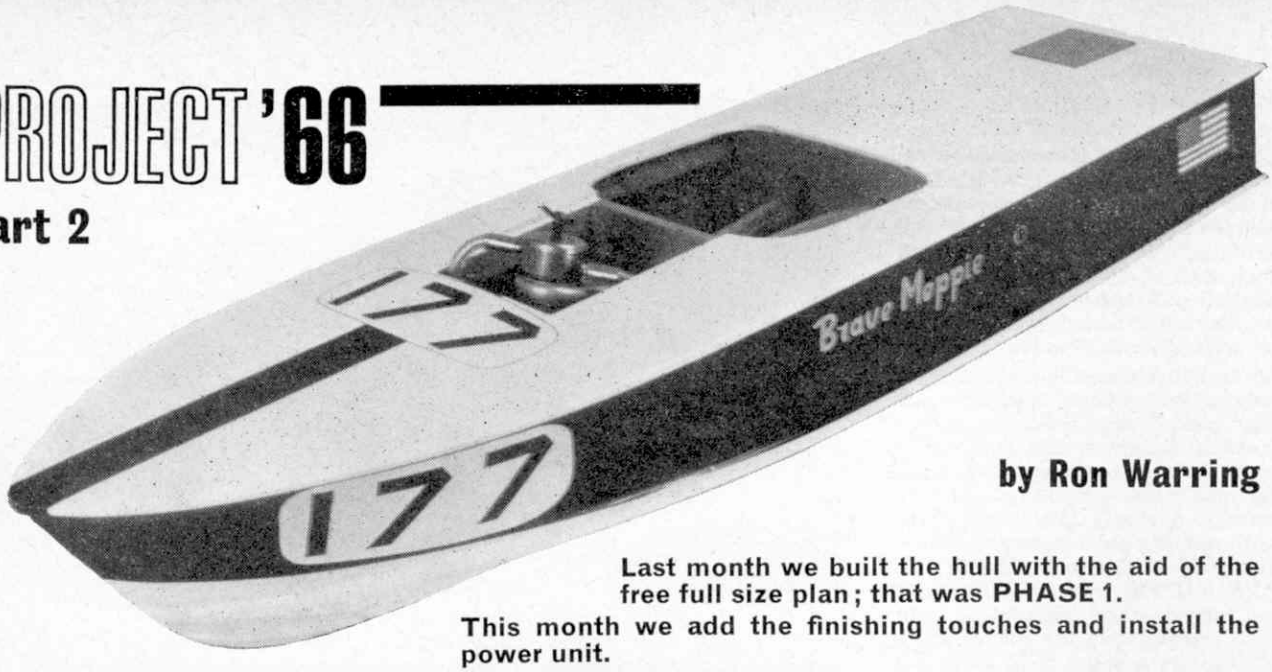

by Ron Warring

Last month we built the hull with the aid of the free full size plan; that was PHASE 1.

This month we add the finishing touches and install the power unit.

Next month in PHASE 3 we will present a second free full size plan showing no fewer than SEVEN different power boats that can be adapted from the basic hull.

Finally, PHASE 4 in the April issue, will show how you can fit any of these boats with radio control.

ELECTRIC OR DIESEL?

If this is your first model powerboat, you will find it much easier to build the electric-powered version. The standard Meccano Power-Drive motor is ideal for this model and is not too heavy on batteries.

A diesel-powered boat is faster, and perhaps rather cheaper to operate in the long run. BUT far more skill is required to install a diesel engine, and great care must be taken to completely fuel-proof the inside of the boat, to prevent the fuel waste and exhaust gases from destroying the paint.

The noise of diesel operation often limits the number of places where the boat can be operated. Even with a 'silencer' the engine can be very noisy. Another point to bear in mind is the possibility of running out of fuel with the boat out of reach of dry land! An electric motor will continue to run, and eventually bring the boat within reach—even though the battery may be getting flat, but a diesel engine just stops—take your pick !

IN this article we shall describe how to complete 'Brave Moppie' as a working model with *either* electric motor *or* diesel power. The choice of power unit is, in fact, wide open. The more powerful the motor the faster the model will go. Thus if you decide on electric motor power, choose a reasonably powerful motor like the biggest models in the 'Orbit' or 'Mabuchi' range. If these are too expensive, buy the largest of the alternative sizes or makes you can afford.

In the case of diesel power, the hull will take any size of engine from 0·5 cc up to 1·5 cc. We have shown the DC 'Spitfire' on the installation drawing and we consider this, or the DC 'Merlin', an ideal power unit for this size and type of hull. Alternatively, if you want more speed, try a 1·5 cc motor.

Before fitting out the model, however, there is still some work to do on the hull. The hull has already been prepared virtually ready for painting if all the stages described in part (1) have been completed. The next thing is to fit the chine strips and gunwale strips, as shown in Fig. 1. Two strips are used in each case since these can readily be bent to the curve of the hull where a single solid strip will probably break. Cement in place securely and hold with pins until dry. When set, lightly round off the edges of the gunwale strips but round off the uppermost side of the chine strips to a complete quarter-circle section.

Each bottom panel now has four $\frac{1}{8}$ in. square balsa spray strips cemented along it, as shown in Fig. 2. These run parallel to the keel, with each strip spaced $\frac{3}{4}$ in. apart. Carry them round the curve of the bow up to the extreme bow or chine line and trim off neatly. It does not matter how the curves of the strips run at the bow, provided they are the same on each side.

Next make and fit the hatches—Fig. 3. These plug into the opening left in the hull. The forward hatch top will protrude above the deck and so must be sanded down to blend into the curvature of the deck. Both hatches should be a nice 'plug' fit in position. It is advisable to cement reinforcing strips of $\frac{1}{4}$ in. square or $\frac{1}{2}$ in. by $\frac{1}{4}$ in. balsa under the edges of the permanently fitted afterdeck pieces along the hatch line to support the decking in this region. This need not be done if the model is to be diesel powered since there is no need to gain access to the rear part of the hull once the steering has been linked up and so the aft hatch can be cemented in place permanently after ballasting. If the model is to be converted to radio control, however (to be described in the April issue), the aft hatch must be removable.

At this stage the propeller shaft tube and rudder tube should be fitted. There is already a 'channel' in the keel unit to take the stern tube and the position of this can be located by measuring $4\frac{1}{4}$ in. along the bottom of the keel from the extreme stern. If the stern tube is more than $\frac{1}{4}$ in. diameter this 'channel' should be opened up with a round file or a similar tool, until the stern tube can be slid up in position until it reaches bulkhead 4. A hole will then have to be cut in bulkhead 4 to allow the stern tube to pass through to its final position. Fill the bottom end of the 'channel', if necessary, with scraps of balsa driven in place and then *thoroughly* seal the area where

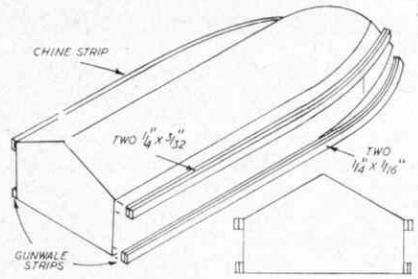

Fig. 1

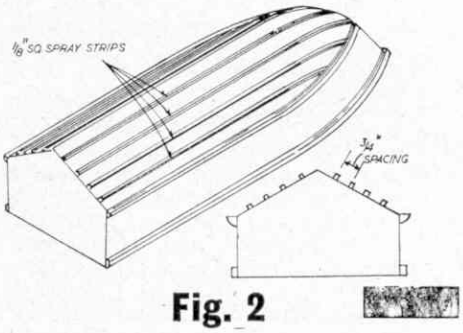

Fig. 2

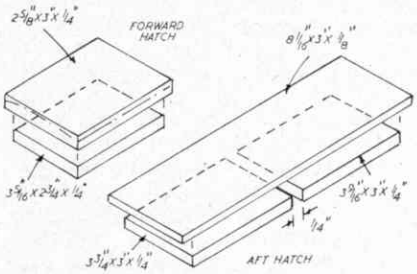

Fig. 3

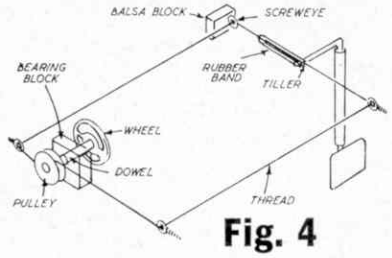

Fig. 4

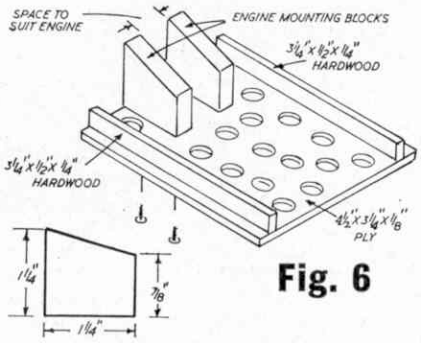

Fig. 6

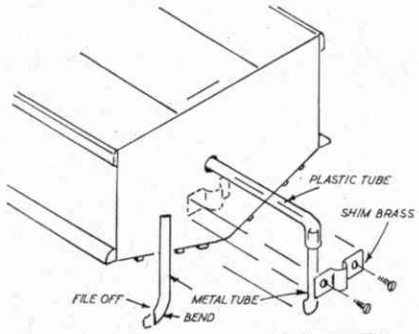

Fig. 7

the stern tube emerges from the bottom of the hull with a generous coating of cement or Araldite.

The rudder tube is much simpler to fit. Simply drill a hole up through the keel immediately in front of bulkhead 7 position—i.e. $\frac{5}{16}$ in. from the outer edge of the transom—and pass the tube up through this hole. Secure in position by cementing, or preferably Aralditing, to the inner face of bulkhead 7. Note that the hole drilled for the rudder tube should be slightly smaller than the tube diameter, so that when the tube is finally fitted it is a very tight, leakfree fit.

Both the rudder tube end and the propeller shaft tube end, incidentally, finish in the hull above the waterline and thus eliminate leakage troubles which are often commonplace with more conventional model boat designs.

At this stage the whole model can be finish painted. If you are using ordinary cellulose dopes, then these can be applied directly over the tissue or nylon-covered hull. If you prefer to use a modern polyurethane finish—which is thoroughly to be recommended—the hull should first be painted with a suitable polyurethane filler-undercoat, rubbed down with garnet paper when dry. This will provide a good 'keying' surface for the polyurethane gloss coatings to follow.

The colour scheme to use for 'Brave Moppie' is black for the hull sides with the rest of the hull and deck white. The racing number is painted in black on a white panel. You can, of course, equally well use other colour schemes if you prefer.

The inside of the cockpit can be left plain, 'varnished' with several coatings of clear dope or lacquer, or painted light grey. There is no need to paint the

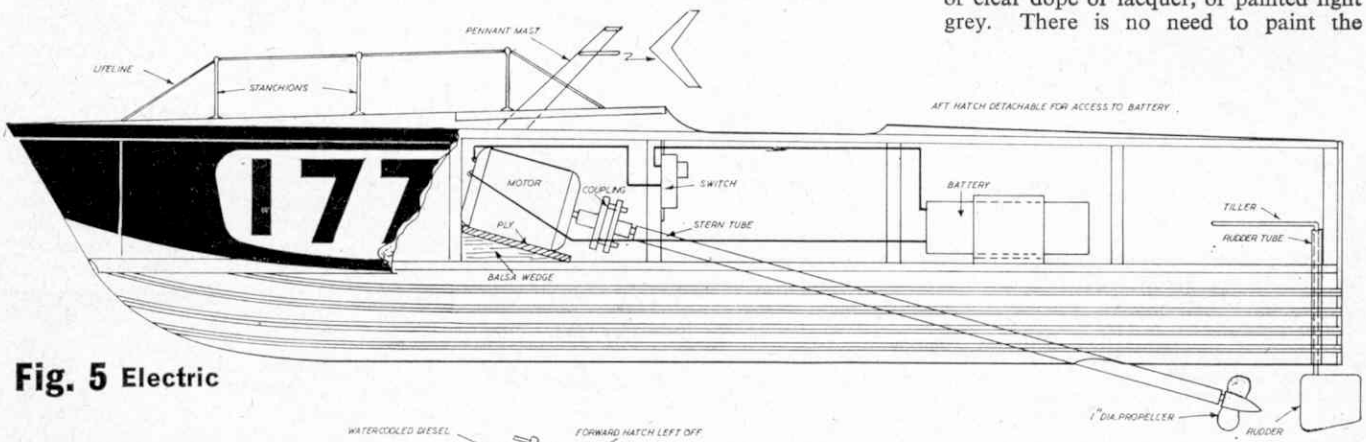

Fig. 5 Electric

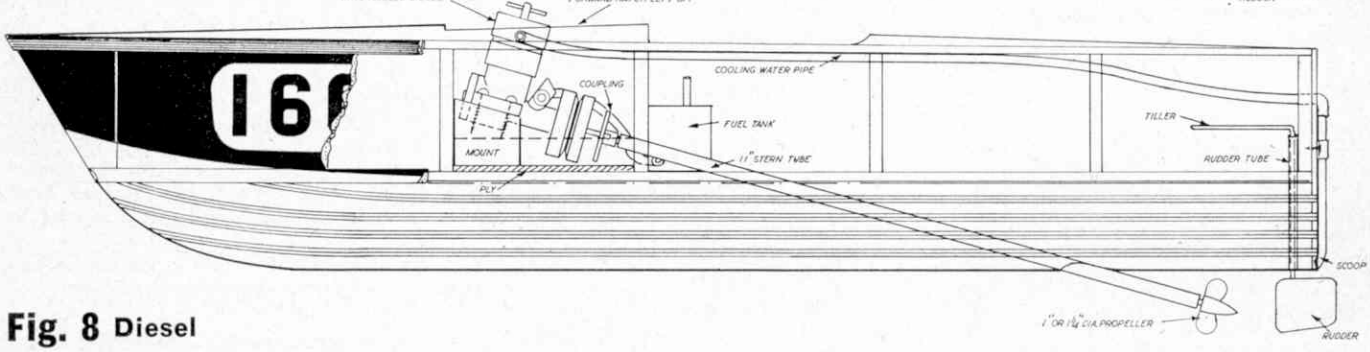

Fig. 8 Diesel

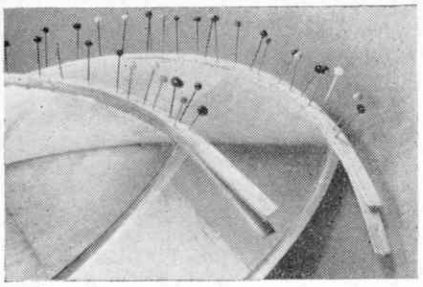

A

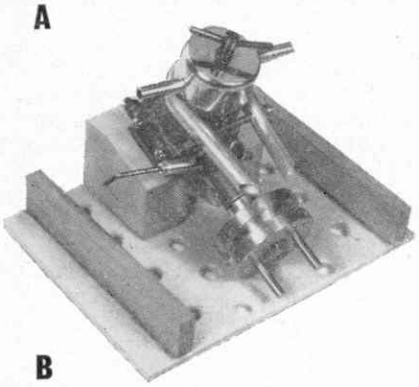

B

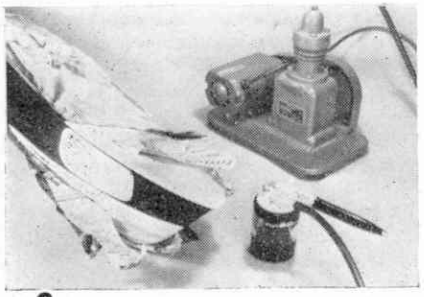

C

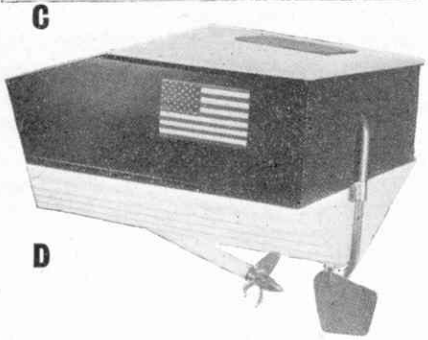

D

A The chine and gunwale strips are held in place with pins until the cement dries

B The D.C. Spitfire securely mounted and ready to install

C The Maxispray unit produces a really professional finish. Spray the entire hull white, then mask the deck and bottom using adhesive tape and newspaper, and spray the sides

D The propeller, rudder and water intake

E The 'plumbing'. 1: water inlet tube, 2: water outlet tube, 3: fuel feed tube, 4: exhaust pipes

E

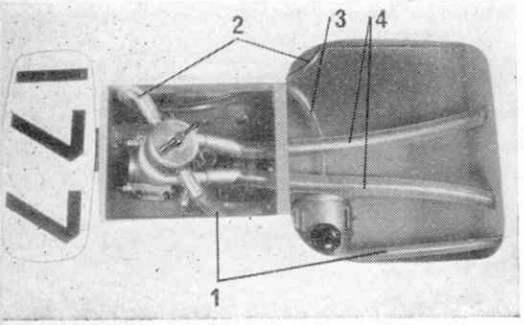

inside of the hull unless the model is to be diesel powered, when both the cockpit and the engine compartment should be given several coats of light grey dope (preferably butyrate or fuel resistant dope). Do not paint with oil colours as these will be attacked by diesel fuel.

Once finished painting, and with all the paint quite dry, the model can finally be fitted out. Assemble the rudder in its tube and bend the tiller at right angles to hold the rudder from dropping out. It is suggested that you hook up the tiller to a proper steering system, as shown in Fig. 4. This is quite easy to rig. A suitable wheel (e.g. a Ripmax plastic launch wheel) is cemented to a short length of $\frac{1}{8}$ in. diameter dowel. Drill a $\frac{1}{8}$ in. diameter hole in bulkhead 4 where you want the wheel to go, and also on a block of balsa to go behind the bulkhead to act as an additional bearing for the dowel. Mount in place with a small pulley on the other end of the dowel, cementing the bearing block to the back of the former but making sure that the dowel is not cemented as well and is free to turn when the wheel is turned.

The motors

To carry the steering cables four small screw eyes are required, screwed into small blocks of hard balsa. These blocks are cemented to the inside of the hull in convenient positions to carry the cable, as shown. The cable itself is simply a length of stout thread. Tie one end to the tiller, pass through the screw eyes on one side and across to the pulley. Wind about half a dozen turns round the pulley, then take back through the other screw eyes and make off by tying to a rubber band which also fastens to the tiller. Check for easy movement, i.e. the tiller and rudder moving as the wheel is turned, and adjust the tension of the rubber band as necessary. Note: holes will have to be drilled in bulkheads 4, 5 and 6 to pass the cable on each side, but the position of these holes is readily found by 'cut and try'.

Installation details for electric motor drive are shown in Fig. 5. The motor is mounted on a ply plate of suitable size, the plate then supported on balsa wedges to line up with the propeller shaft. The size of plate, and of the balsa wedges, will depend on the size of motor used. Mount the motor on the ply plate first and line up temporarily by 'trial and error'. When you are satisfied with the line-up, cement in place permanently, using plenty of cement. Any type of flexible coupling can be used to connect the motor to the propeller shaft — and again the type used will depend largely on the choice of motor. Alignment should be made with the two coupling units in position (i.e. one on the motor shaft and the other on the propeller shaft) as this makes it easier to establish satisfactory alignment.

The battery for the electric motor can be laid in the space between bulkheads 5 and 6, resting on the chine shelf; or you can make up a simple battery box from balsa sheet to hold in position. Use a reasonably large size of battery, such as a 4·5 volt flat flashlamp battery. Accumulators are better still, if you can afford them. All that has to be done then is to wire the battery to the motor through an on-off switch. This switch should be mounted on the cockpit side of bulkhead 4, where it is easily reached.

With the motor in position there should be no need to have to gain access to this compartment again, so the fore hatch can be cemented in place and the single lifeline supported on stanchions added; also the pennant mast, cut from $\frac{1}{16}$ in. ply.

Fitting of a diesel power unit demands a little more work for it is most important that the engine be securely mounted. Otherwise it can vibrate loose or, more likely, be pulled loose when starting with a cord round the flywheel. This time, therefore, we need a very robust engine mount, as shown in Fig. 6. This consists of two blocks of really hard wood, at least $\frac{1}{2}$ in. thick and shaped with an angled top edge, as shown. These are glued *and screwed* in place to a $4\frac{1}{2}$ in. $\times$ $3\frac{1}{4}$ in. ply panel, with the spacing between the blocks arranged to suit the engine being used. In the case of the 'Merlin' or 'Spitfire' the blocks should be spaced exactly $1\frac{3}{16}$ in. apart so that the crankcase of the engine just fits between the blocks with the crankcase lugs resting on the angled faces of the mounts. The ply base piece is further stiffened by two lengths of $\frac{1}{2}$ in. by $\frac{1}{4}$ in. hardwood *screwed and glued* in place about $\frac{1}{2}$ in. from the edges, as shown. The ply base should then be drilled out with a large number of holes as this will considerably improve the strength of the glued assembly when this mounting unit is finally cemented in place.

Accuracy is essential

Do not cement in place until you have checked that the motor lines up correctly with the propeller shaft. First, lay the mount in position resting on the chine shelf, lay the engine on the mounting blocks and see if the alignment is satisfactory. If all is well, secure the engine to its mounting blocks with steel woodscrews at least $\frac{3}{4}$ in. long and recheck that the alignment is OK. Then 'flood' the floor of the hull with cement and press the mount in place, making sure to line the motor up with the propeller shaft before leaving to set.

If the alignment is *not* satisfactory, then see if it can be improved with washers under the engine lugs. If so, proceed as above, with the alignment washers in position. If still not right then you may have to trim the engine blocks to get the correct alignment. Time spent in getting the engine alignment as near perfect as possible will be thoroughly worthwhile as the engine will run with less vibration and develop more power.

Continued on page 35

"PROJECT 66" See Page 10

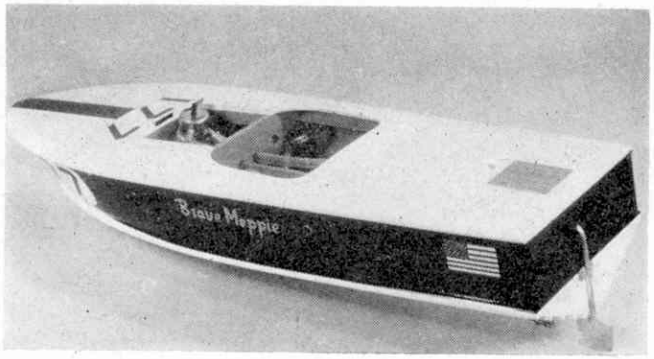

Solarbo BALSA

Model boat hulls intended for diesel power are often made from ply. That makes them more difficult to construct, and you need slow-setting synthetic resin glues to produce waterproof joints. Balsa gives you 'short cut' construction . . . so much easier and faster, and so much more enjoyable to work with. And a properly designed hull, like 'Project 66', is more than tough enough for the job.

A Balsa hull is also lighter, which can mean a better performance on less power. You gain out all round with Balsa construction!

There's one important point, though. You need the *best* Balsa for a job like 'Project 66' . . . and that means SOLARBO Balsa. Solarbo Balsa is specially selected and graded for modelling use and there just is no better Balsa obtainable anywhere. Use Solarbo Balsa for all your models. It costs no more, but the brand name ensures you that 'little extra' in quality!

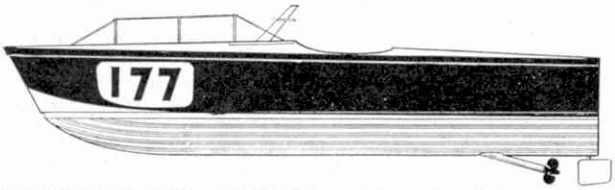

SOLARBO BALSA SIZES *(Obtainable at all model shops)*

- ☐ 4 off 36″ × 3″ × $\frac{1}{4}$″
- ☐ 1 off 36″ × 3″ × $\frac{3}{16}$″
- ☐ 2 off 36″ × 2″ × $\frac{3}{16}$″
- ☐ 3 off 36″ × 3″ × $\frac{1}{8}$″
- ☐ 2 off 36″ × 2″ × $\frac{1}{8}$″
- ☐ 6″ length 2″ × 1$\frac{1}{2}$″ block
- ☐ 6″ length 2″ × 2″ block
- ☐ 1 off 36″ × $\frac{1}{2}$″ × $\frac{1}{4}$″
- ☐ 3 off 36″ × $\frac{1}{4}$″ × $\frac{1}{16}$″
- ☐ 3 off 36″ × $\frac{1}{4}$″ × $\frac{3}{32}$″
- ☐ 6 off 36″ × $\frac{1}{8}$″ sq

Other materials required include $\frac{1}{16}$″ ply, balsa cement, tissue and pins.

REMEMBER! . . . next month 'Meccano Magazine' is giving plans for making SEVEN MORE MODELS based on the 'Project 66 hull! Make sure you have stocks of Solarbo Balsa ready to start building! The material list above shows the requirements for making the hull.

Solarbo

SOLARBO LIMITED
COMMERCE WAY
LANCING, SUSSEX

THE BEST BALSA YOU CAN BUY

ALWAYS ASK FOR IT BY NAME

IF IT'S RipMax IT'S GOOD!

SELECT "RIPMAX" FITTINGS FOR YOUR "PROJECT 66" ★

AT YOUR MODEL SHOP!

See page 10

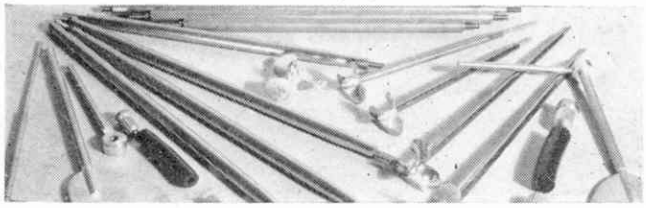

SELECTED both by the designer and your Editor for fitting our 'Project 66' —RIPMAX ACCESSORIES. As all experienced modellers know—if it's Ripmax it's good! . . . and there's an 'RMA' fitting or accessory to suit ALL your modelling requirements A Ripmax item guarantees you real value for money, too. Your local model shop can show you all these items.

'PROJECT 66' — DIESEL

- ★ TD.II 11″ shaft and tube . . 6/8
- ★ MP.30 nylon Racing prop. . . 2/7
- ★ MA.40 Rudder assy.. . . . 4/6
- ★ C.741 Ball Coupling . . . 5/6
- ★ MA.31 Fuel Tank 7/11
- ★ MA. 27/2 Silencer 8/6
- ★ MA. 61 Transom Flange . . 4/11
- ★ 18″ $\frac{1}{4}$″ bore Plastic Tube . . 1/-

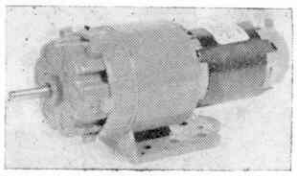

ELECTRIC MOTORS

There's a size and type of electric motor in the 'RMA' range to suit any model. Here are just a few.

- **Richard I** (six-speed) . . . 49/6*
- **Richard II** (six-speed) . . . 57/6*
- **MiniRichard** (six-speed) . . 47/6
- **Super-Q ORBIT**—105 . 5/11; 205 . 6/3; 305 . 6/11; 405* . 8/11; 505* . 10/11; 605* . 39/6
- ★ **ATOM** . 3/11; **'RMA' Baby** . 6/6
- ★ **NAUTOCRAFT*** (3-6U). 72/6
- ★ **MARX DECAPERM*** . 44/11
- ★ **MARX HECTOPERM*** . 58/6
- ★ **BONGO*** inb'd/outb'd 42/6, 50/-
- ★ Outboards—**JOHNSON** . 34/11
- ★ **EVINRUDE** . 36/-, **OB300** . 8/6

** Suitable for 'Project 66'*

'RMA' DECK FITTINGS

There are over 100 items in the complete range . . . here is just a selection . . . Every fitting is true scale . . . many have working features as well. In self-colour plastic and plated metal.

SPECIALLY RECOMMENDED 'VALUE FOR MONEY'

GRAUPNER BOAT KITS

18″ KITTY (right) . . 35/-
Electric-powered cabin cruiser specially designed for radio control. Finished moulded hull in this super value kit.

CONSTELLATION (below) 79/6
A fully moulded hull in foam plastic takes all the hard work out of building this wonderful scale model, ideal for R/C.

Other Graupner kits include:—

- 25″ long **Patricia** yacht . 84/-
- 36″ long **Gracia** yacht* . 117/6
- 39$\frac{1}{2}$″ long **Theodor Heus*** 159/6
- 35″ C-C **Holiday** . . . 159/6
- 42″ long **Graf Zeppelin***. 169/6
- 33″ long **Esso Berlin*** . 99/6
- 29″ long **Condor*** . . 132/6
- 27$\frac{1}{2}$″ long **Pamir** . . . 122/6
- 36″ long **Heligoland** liner* 170/-

**Suitable for radio control*

★ RIPMAX MODELS & ACCESSORIES

The world's FINEST and LARGEST RANGE of model accessories . . . fittings . . . motors . . . kits . . . radio controls . . . in fact, everything you could need for model making. For the best, INSIST ON RIPMAX . . . every item tested and fully guaranteed! If in difficulty write: RIPMAX, Models & Accessories, 80 Highgate Road, London, N.W.5.

AT YOUR LOCAL MODEL SHOP