'Grasshopper' type Stationary Steam Engine

DESIGNED, BUILT & DESCRIBED BY MIKE COTTERILL
PHOTOGRAPHS BY JOHN WOODWARD

NOT built from the contents of any specific Meccano outfit, the Steam Engine described here by Mike Cotterill is a good example of a medium sized 'freelance' advanced model. Although built originally without regard to the parts required, owners of a Meccano set 10 should be able to reproduce the main features without difficulty.

WHEN Meccano first appeared, industrial steam engines were far more common than today, and it is little wonder that plans for engines of various sorts have repeatedly appeared in Meccano Instructions Books and Leaflets.

Characteristic of the real-life engines was the massive constructional strength and engineering perfection that kept many in sound working order for well over a century of continued work in hoisting, powering, generating and pumping. In my version I set out to capture those qualities of strength and power.

In real life, the larger steam engines generally transmitted power from the piston rod to a rocking beam via James Watt's parallel motion, and an article on this appeared in the Midlands Meccano Guild Gazette No. 1 of January 1978, with an important correction in issue No. 2 of September 1978.

James Watt patented his invention and established a hold on the growing industry of engine manufacture that gave him a premier position. The most successful effort to by-pass this patent hold was with a linkage that became known as the 'Grasshopper Type', and this continued to be produced long after Watt's patents had expired, although Watt's motion dominated in the larger engines.

This model is of the Grasshopper type, and Meccano modellers who build it will be rewarded by being able to observe it's fascinating motion in action. My own model is powered by a mains motor of uncertain origin, and for that reason it is left to the individual to determine the most suitable motor to power the model.

Liberal use is made of brassware and Washers, but modellers will readily recognise that which can safely be dispensed with, or substituted if supplies are limited. The model will readily lend itself to further ornamentation in the way of railings and steps etc. if required.

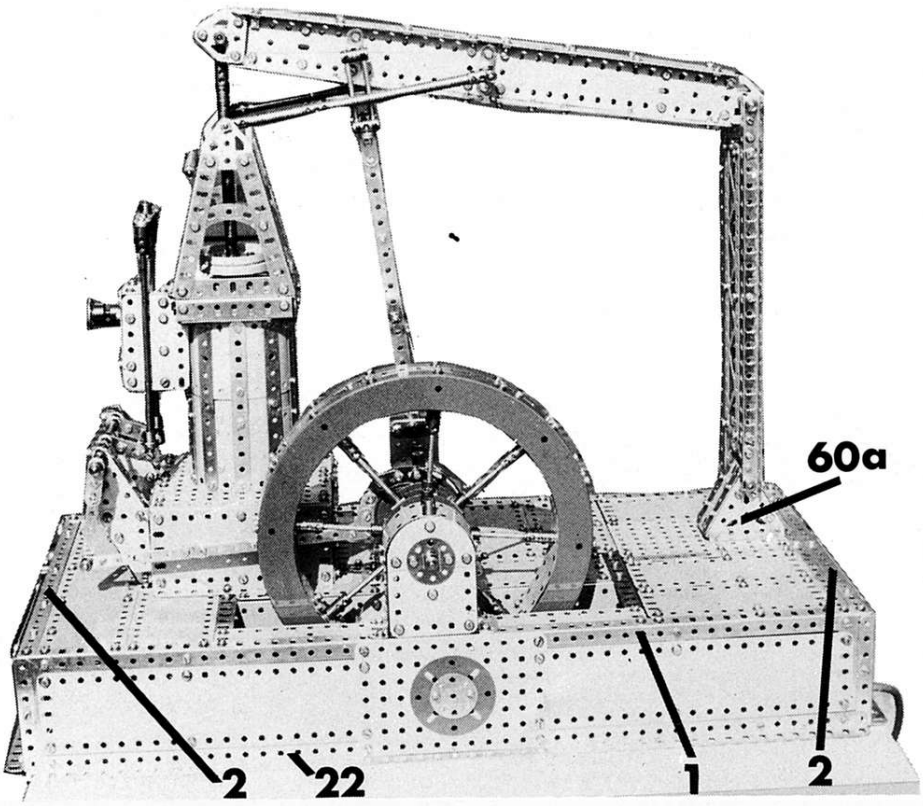

Fig. 1 General view of the Grasshopper beam Engine showing the beam at top dead centre of it's stroke.

THE BASE

Figs. 1, 2, 3 and 4.

Two 24½" Angle Girders 1 are bolted to two 12½" Angle Girders 2 to form a rectangle. Across this frame are fixed six separate 12½" Angle Girders, 3, 4 and 5 and 6. Note that pairs 3 and 5 are bolted back-to-back for strength. Between Girders 4 and 5 are fixed 12½" Angle Girder lengthways, 7, 8, 9, 10 and 11. A 4½" Angle Girder 12 is fixed alongside the Girder 10. Two 9½" Flat Girders, 13 and (fixing Bolts shown at) 14, are fixed to Girders 2, and a further 9½" Flat Girder 15 is affixed to 24½" Angle Girder 1, as shown in fig. 3. A 12½" Flat Girder 16A is joined to Flat Girder 13.

Two 2½" Flat Girders 28 and 29 are fixed vertically to Angle Girders 11 and 12. A 2½" x 1½" Flanged Plate 16 has its long sides extended outwards by a 2½" Strip 17 and, on the other side, a 2½" Narrow Strip 18, held by Fishplates. The entire sub-assembly is fixed to the framework by two 1½" Angle Girders, the fixing Bolts of which can be seen at 19.

Most of the base plating detail is clear from fig. 2; points to note are the 5½" x 1½" Flexible Plates 20, and the presence of a 2½" x 1½" Flexible Plate underneath the eccentric.

The construction of each of the four corners is clear from fig. 4; each has a 3½" Flat Girder on either side, held together by a 3½" Angle Girder. The two short sides are joined by 12½" Angle Girders with flanges outwards, and the longer sides are similarly joined by 24½" Angle Girders 22 affixed by their penultimate holes to allow a vertical corner. Side plating is shown in figs. 1 and 3, the incorporation of opening flaps is optional and depends on the machinery within. The use of Flat Plates here adds considerably to the overall strength of the main framework.

Two 12½" Angle Girders 21 are affixed to the Girders 22 and joined transversely by two further 12½" Angle Girders 23, whose flanges face upwards. The square thus formed is braced at its four corners by Large Corner Brackets. Three further 12½" Angle Girders 25, 26 and 27 run across the square with their flanges upward. To each Flat Girder 28 and 29 is fixed a 2½" x 2½" Flat Plate 30, these are also joined to the flanges of Girders 26 and 27 respectively. The centre holes of Plates 30 support a 3½" Axle Rod 32, on one end of which is a ½" Pinion. This meshes with a 50ft Contrate Gear on a vertical 5" Axle Rod 31, which rises in the centre of the innermost crankshaft bearing, and which is surmounted by a ½" Bevel Gear. This Gear is later used to power the crankshaft.

Each side of the flywheel well consists of a 12½" x 2½" Strip Plate joined to the flanges of Girders 7 and 8, and braced at the bottom corners by 2½" x ½" Double Angle Strips. The bottom of the well is a 4½" x 2½" Flexible Plate 34 joined to one Girder 23 and a 5½" Strip 35. By means of 2½" Angle Girders, two

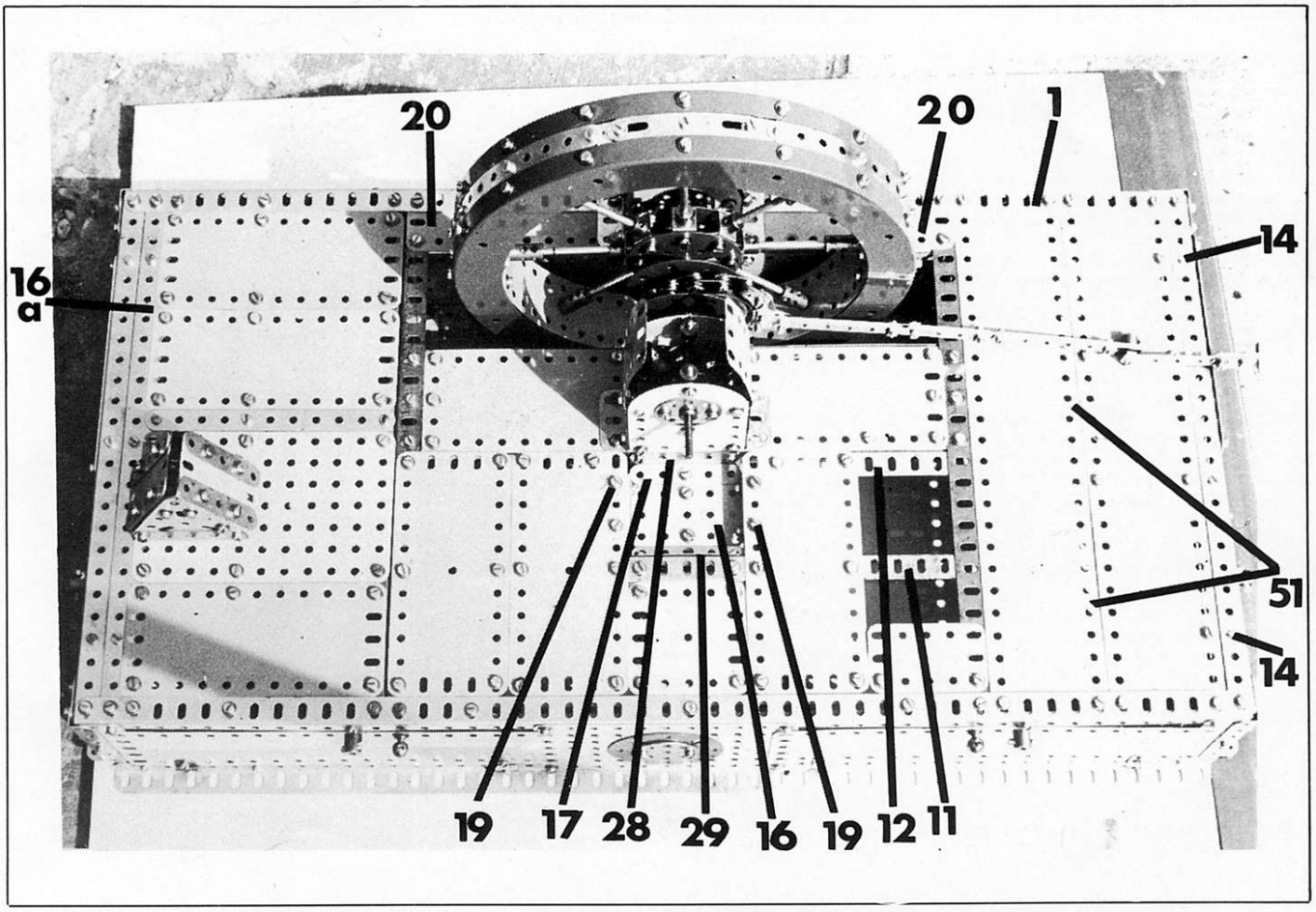

Fig 2 The base as seen from above, following the removal of the cylinder and beam assemblies.

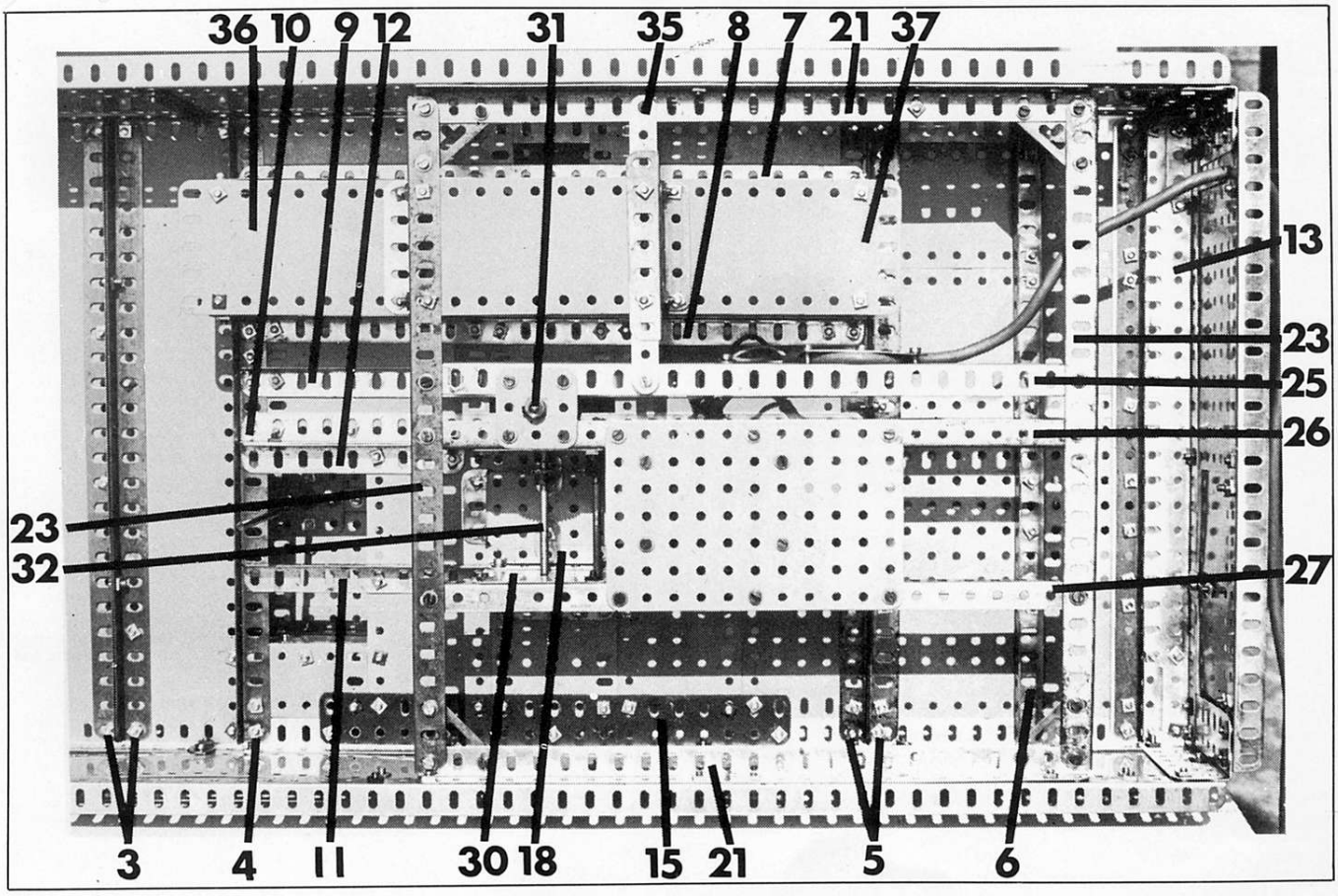

Fig. 3 View of the underside of the base.

further 4½" x 2½" Flexible Plates 36 and 37 join the 2½" x ½" Double Angle Strips to complete the bottom of the flywheel well, which thus has a central dip to accommodate the flywheel. The ends are filled in by 2½" x 2½" Flexible Plates, and the sides of the central dip are filled by 4½" Flat Girders fixed to the vertical Strip Plates.

At this point one should arrange the motor and drive transmission to turn Axle Rod 31 at about 180 RPM. This will produce a crankshaft speed of about 30 RPM, at which the intricate motion can be appreciated without strain on the gearing.

THE CYLINDER AND BASE.

Figs. 4, 5, 6 and 7.

Fig. 5 shows the underside of the cylinder base. It consists of two 5½" x 2½" Flat Plates 38, and two 2½" Strips fixed to a central 1½" x 1½" Flat Plate. The 2½" Strips 'fill-in' the gap between the Plates 38. Around the inside top edges are fixed four 5½" Angle Girders, and the vertical corners are 2½" Angle Girders joined at their lower ends by four more 5½" Angle Girders, elongated hole flanges facing outwards. The four sides are filled in with one5½" x 2½" Flexible Plate each. The valve control brackets 38a are seen in fig. 4 and consist of 2½" x 1½" Trianglular Flexible Plates arranged as shown and made up to ½" thickness by two 2½" Angle Girders 40. The upper sloping edge, near the cylinder, is filled by a 2½" Strip held by an internally-mounted Angle Bracket, and the lower sloping edge is filled by a 2" Slotted Strip held by an internally mounted Double Bracket. Each complete valve support bracket is mounted by means of two further 2½" Angle Girders to one side of the cylinder base, so the brackets are 4½" apart, ie there are seven holes left clear between them.

The cylinder, figs. 6 & 7, is 5½" tall and comprises three rings each consisting of five 2½" x 2½" Curved Plates joined to form a complete circle. The bottom and top circles overlap the central one. Alternate vertical lines of holes are overlaid with 5½" Strips to simulate cladding, and fixed inside the cylinder are two 5½" Angle Girders to lend rigidity. At the base of the cylinder, four Threaded Bosses 45 are mounted on ½" Bolts with their transverse threaded bores vertical. The cylinder is mounted on it's base by the four Bolts 40a passing through the threaded bores of the Threaded Bosses 45.

The top of the cylinder consists of four 3½" Angle Girders forming a square, with two additional 3½" Angle Girders 41 on opposite sides, providing the superstructure mountings. Four 4½" Angle Girders are then affixed to the flanges of Girders 41, and inclined as shown. On three sides, further 3½" Angle Girders 42 are bolted to the square to provide horizontal surfaces underneath, to which are affixed two 3" Flat Girders. At the inside top end of the cylinder, in line with the internal 5½" Angle Girders are situated two further Threaded Bosses 44, again with their transverse threaded bores vertical. Bolts passed through holes in the

Fig. 5 Underside of Cylinder base.

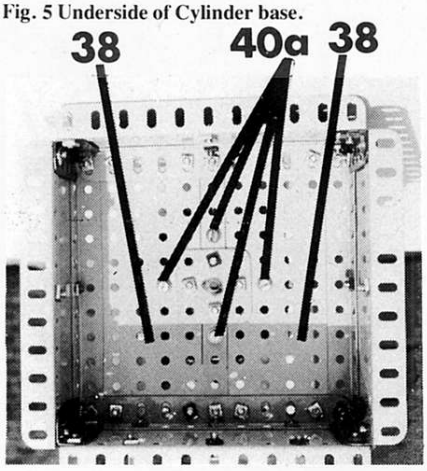

Fig. 4 One of the base corners, and cylinder assembly.

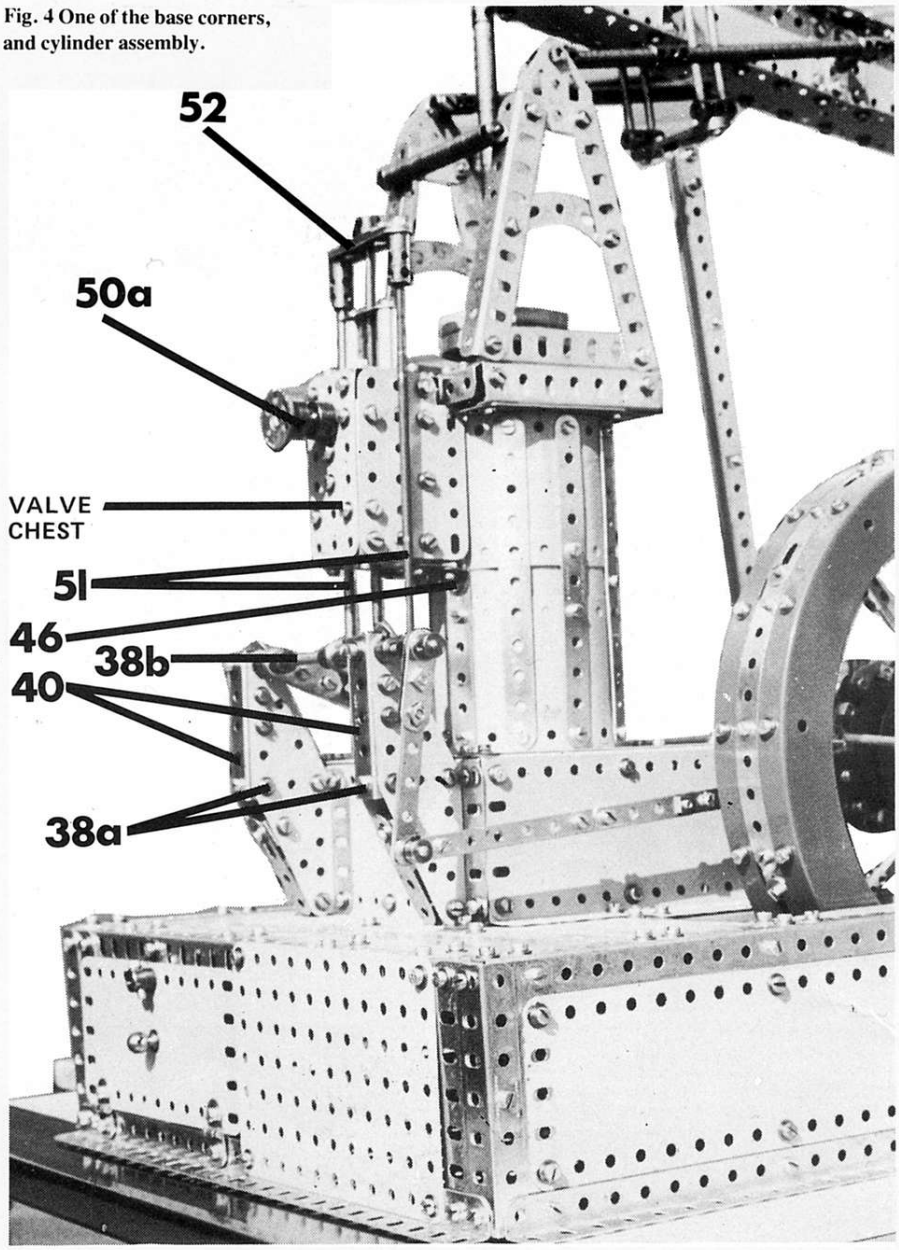

3" Flat Girders secure the top to the cylinder. On the fourth side of the 3½" Angle Girder square a 1½" Angle Girder is fitted, with it's elongated hole flange facing outward, and on the side of the cylinder, about ½ way up, are fixed two ½" x ½" Angle Brackets 46 (fig. 4). These are spaced 1½" apart, with protruding lugs uppermost.

The plating on the cylinder top, (fig. 6) consists of four 2½" x 1½" Flexible Plates overlapped to leave a ½" square hole in the centre. The piston rod guide consists of two Wheel Flanges, back-to-back, fixed to the top by four 1⅛" Bolts spaced by Couplings. The bracing at the top of the superstructure is effected by a 3½" Axle Rod, packed with Washers to give a more realistic effect, and held between two Collars. These are secured to the frame by Bolts, packed with two Washers each under their heads to ensure a tight grip.

THE VALVE CHEST

Figs. 4 & 8.

The side of the valve chest facing away from the cylinder is formed by a 3" x 1½" Flat Plate, and the two other sides consist of 3" x 1" Flat Plates, each partly overlaid by a 2½" x 1½" Flexible Plate. The sides are held together internally by 1½" and 2" Angle Girders. Two Threaded Bosses 47 are arranged so that their transverse threaded bores are vertical, and the 1½" Angle Girder protruding from the cylinder top, slides between the Threaded Bosses and the top 1½" x 1½" Flat Plate 48. Bolts passing through the corner holes of the Flat Plate 48 and the 1½" Angle Girder screw into the transverse threaded bores of Threaded Bosses 47, and thus secure the valve chest to the cylinder top.

The bottom of the valve chest is formed by another 1½" x 1½" Flat Plate, and two Fishplates connect this to the two Angle Brackets 46 on the cylinder side, thus giving additional rigidity. The Threaded Crank 50 is secured to the inside end wall of the valve chest and receives a 3/4" Bolt which secures a Collar to the outside wall. To this Collar is affixed a Socket Coupling 50a, carrying a 1" dia. Bush Wheel to simulate the steam pipe connection. The vertical centre holes of the valve chest are extended upwards by a 1½" Strip supported by two small cylindrical cores from the now obsolete 4EL Outfit. These can easily be substituted by Couplings or Collars etc.

The entire cylinder and base sub-assembly is fixed to the main frame by placing the protruding 5½" Angle Girder, underneath the valve support brackets, on the holes in the main frame marked 51 (fig. 2). Two Bolts are passed through each of the four Angle Girders forming the bottom of the base, to make a firm fixing.

MAIN BEARING SUPPORT

Fig. 9

Each of two sides consists of a 2½" x 2½" Flat Plate for strength, overlaid on the outside

by a 2½" x 2½" Flexible Plate for a solid appearance, plus a Semi-Circular Plate overlapping one hole. A Rod Socket is secured to the top hole of the Semi-Circular Plate on each side, by a Bolt through it's transverse threaded bore, and spaced from the Plate by a Washer.

The two sides are connected by four 2½" x 1½" Flexible Plates and two 1½" Angle Girders. The two uppermost 2½" x 1½" Flexible Plates are curved over and secured to the Rod Socket threads by Threaded Bosses to represent grease cups. The Wheel Discs on the outside are for decoration only. Two main bearing supports are constructed in this manner.

ECCENTRIC

Fig 9.

It is advisable to build this up on a temporary crankshaft as shown. It consists of a 1⅛" Bolt over which are passed a Face Plate, two 2" Pulleys with bosses outermost, and a second Face Plate. The crankshaft runs through the bosses of the Face Plates and through a hole of each of the 2" Pulleys. The gap between the Face Plates and Pulleys is filled with Collars and/or Washers.

The eccentric strap consists of thirteen Fishplates joined in a circle but spaced apart by three Washers so that two circles of Fishplates ride on the two 2" Pulleys of the eccentric. Two Small Corner Brackets complete the circle, and these grip two 5½" Narrow Strips sandwiching two 3½" Narrow Strips. The other holes of the Corner Brackets are spaced by two Washers. The eccentric arm is completed by two 3½" Narrow Strips sandwiching two 5½" Narrow Strips to make a solid eccentric arm 9" long. By removing one screw of the eccentric strap and loosening another, the assembly can be placed on the eccentric and adjusted. It is preferable to allow a fairly loose fit.

FLYWHEEL

Fig. 10.

Two large Flanged Rings are connected by eight 1½" Strips mounted internally and equally spaced around their circumferences. Four Formed Slotted Strips and four 4½" Strips are carefully curved to the same arc as the Flanged Rings, then alternately secured by a Bolt into a Threaded Boss to the centre holes of each 1½" Strip. To each end of each 4½" Strip is attached three Fishplates. One of these is fixed to the adjacent Formed Slotted Strip, and the other two are attached to the holes in the Flaged rings. In the longitudinal threaded bores of each of the Threaded Bosses are held 1" Screwed Rods and on each of these, in line with the inner edge of the Flanged Rings, are lock-nutted two Nuts.

The inside edge of the flywheel, (best seen in Fig. 1) consists of four 5½" x 1½" Flexible Plates joined to four 2½" x 1½" Flexible Plates so that only the central ½" portions of the latter show. The central holes of each of these eight Flexible Plates go over the ends of the 1" Screwed Rods, the plating is then secured against the lock-nuts by eight Threaded Couplings.

The hub of the flywheel (fig. 2) consists of eight Large Fork Pieces mounted bosses outermost inside and around the edges of two Face Plates. The spokes are eight 2½" Axle Rods which, during construction, can be pushed well into the Fork Pieces, and then pulled out to be secured in the smooth bores of the Threaded Couplings. This assembly should be self-centring if all the tightening is done together.

CRANKSHAFT ASSEMBLY.

An 8" Axle Rod forms the crankshaft, and, after inserting this through both sides of the outermost bearing assembly the following parts go on; three Washers, one Collar, the completed flywheel assembly, completed eccentric assembly, and one more Washer. The 8" Axle Rod then enters one side of the inner bearing assembly and receives a Large Bevel Gear. (This is powered by the ½" Bevel Gear mounted on Axle Rod 31 mentioned earlier.) Coming through the other side of the inner bearing assembly, it leaves 1" of available rod to receive the crank.

It is convenient at this point to link up the valve gear as seen in figs. 1 and 4. A 6½" Axle Rod 38b runs through the top holes of the valve support brackets, protruding a fraction at it's 'free' end. On it's operational end it carries a lever comprising three 3½" Narrow Strips clamped between two Cranks. In the end hole of this built-up lever is fixed a Small Threaded Pin, and the 9" long eccentric arm is secured to this by a Collar. Collars on the inside edges of the valve support brackets secure the 6½" Axle Rod 38b, and two trip levers are attached to this Rod between the brackets. Each trip lever consists of one 2" Slotted Strip sandwiched between two Cranks, with the end of the slot extending the Cranks to 1½" Radii. In each of the slots is lock-nutted an End Bearing, each holding a 6½" Axle Rod 51. These two Rods enter the smooth bores of two Threaded Couplings which form the valve crosspiece, being connected together by a bar of five stacked 2½" Strips 52. To the centre of this bar is fixed a Double Arm Crank, boss uppermost, and an 8" Axle Rod fixed in the boss of this represents the Valve Rod. This travels vertically through the central holes of the valve chest.

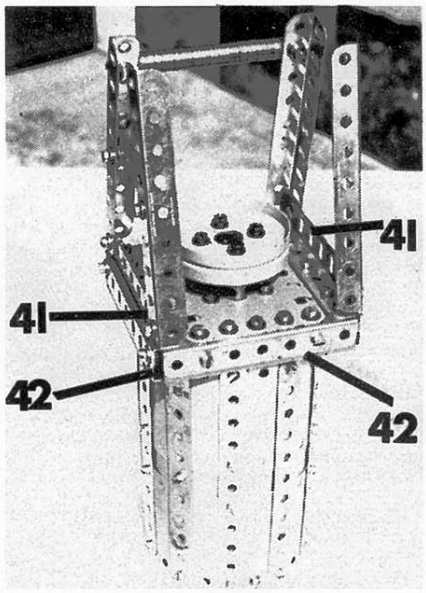

Fig. 6 The cylinder separated from it's base.

ROCKING ARM PIVOT BLOCK

Figs. 1 & 2.

This comprises two large Triangular Plates (fig. 1), each secured to the base by 2½" Angle Girders, and spaced 1½" apart. The two inside edges of the Triangular Plates support 1½" Angle Girders, and on each of these are mounted two 2½" x 1½" Flexible Plates overlaid with 2½" Strips, to fill in.

ROCKING ARM

Fig. 11

Each side consists of two 12½" Angle Girders joined to form a 'U' section girder, and at each end a Crank is situated with it's boss facing outward into the channel. Four 9½" Angle Girders are then made up into two further 'U' section girders, then fixed to the inside of the 12½" 'U' section girders. The two joined compound girders are then connected by two 9½" Braced Girders, and the entire assembly is strengthened by two 3" Screwed Rods at convenient points.

Fig. 7 Inside view of cylinder from below.

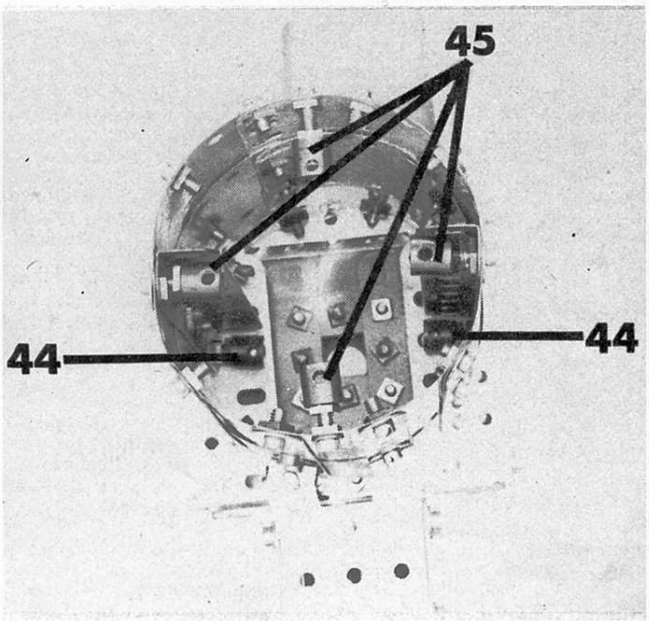

Fig. 8 Inside view of valve chest.

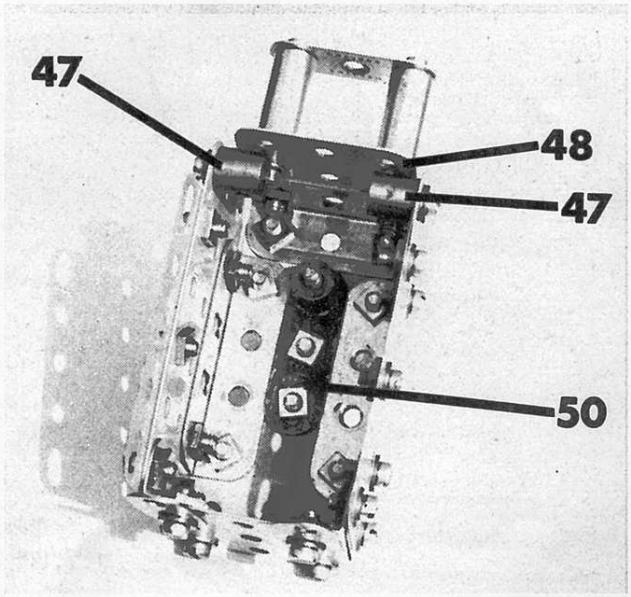

CRANK
Fig. 11.

This comprises seven stacked 3" x 1½" Flat Plates sandwiched at one end between two Double Arm Cranks which carry a 2" Axle Rod forming the crank pin. At the other end the Flat Plates are clamped between two Bush Wheels, spaced away by one Washer thickness and secured by four ½" Bolts. The two Bush Wheels are secured on the 8" Axle Rod crankshaft with suitable Washer spacing. The connecting rod consists of eight 9½" Strips clamped together and surmounted at the top end by two 1" x 1" Angle Brackets facing outwards.

A 'T' crosspiece of five stacked 2½" Strips is bolted to the innermost holes, and two Couplings are secured to the outer 'T' piece holes by Bolts passing into their central threaded bores. Four 2½" Rods rise vertically from these Couplings to two further Couplings 53. The connecting rod is secured pivotally to the crank pin by a Short Coupling with Washer spacing.

THE BEAM.
Fig. 11.

The centre of each side of the beam consists of a 1½" x 1½" Flat Plate to which are secured two 5½" x 1½" Flexible Plates 54 and four 7½" Angle Girders 55 by their elongated holes. Extending Plates 54 are two 2½" x 1½" Flexible Plates, and the assemblies should be tightened so that the Angle Girders lie away from the 1½" square Plate at the centre and close-in at the extremities to produce a slight taper. To the centre of each side is secured a Double Arm Crank 57, and 4" over to one side, (where there is no hole in the Flexible Plating), a second Double Arm Crank 58 is fixed. At one end the sides are joined by two 3/4" Bolts, clamping the ends on each side of an assembly of twelve stacked Flat Trunnions.

At the other end, the two sides are joined by two 3/4" Bolts through the penultimate holes 59, with an assembly of sixteen stacked 1½" Strips between. Seven stacked Flat Trunnions are bolted to the exterior of each side on 3/8th" Bolts, and secured together by a 1⅛" Bolt through the apex hole of the Flat Trunnions, with clamping Nuts for each side. A 1½" Axle Rod, of which one of the securing Collars can be seen at 60, is held between the Flat Trunnions, and this holds a Coupling, hanging from the Rod 60 by it's top transverse smooth bore.

This Coupling receives the top end of the cylinder rod which must measure very close to 14¼" for correct operation. (Fig. 11, bottom.) Collars, Washers and Couplings can be used to 'widen-out' the diameter to improve realism but the length of 'free' Rod at the bottom must be 6". Any more will cause exposure at the top of the cylinder and any less may cause jamming. The 14¼" length may be made up from any suitable lengths of Axle Rod connected together.

The top and bottom of the beam are plated with overlapped 5½" x 1½" Flexible Plates when it becomes quite rigid. Through the bosses of central Double Arm Cranks 57 is passed a 4" Axle Rod and, from this, pivot the tie rods which measure 8½" end to end including Couplings. These can again be widened-out by liberal use of packed Washers etc. to achieve a realistic effect.

FINAL ASSEMBLY.

The rocking arm should be connected to it's triangular pivot block 60 by a 3" Axle Rod through the Crank bosses in it's lower end, spaced with washers and tightened. The upper end should be secured in a similar manner, through the stacked Flat Trunnions incorporating the penultimate hole of the beam.

The Cylinder rod should be lowered down the centre holes of the cylinder and base and it's upper end locked into the Coupling pivotally attached to Rod 60 at the end of the beam. The tie rods should be secured to the Flat Trunnions completing the top of the cylinder superstructure (fig. 1) by Pivot bolts. It may be found in practice that small adjustments need to be made to the lengths of these rods to obtain an even action.

The crank is secured to it's shaft and the connecting rod brought up to the beam. 1" Axle Rods are pushed through Couplings 53 into the bosses of the Double Arm Cranks 58, and locked there to minimise any sideways 'play'.

After checking the tightness of all transmission bosses plus a light oiling, the model will be ready to demonstrate its unusual and fascinating motion.

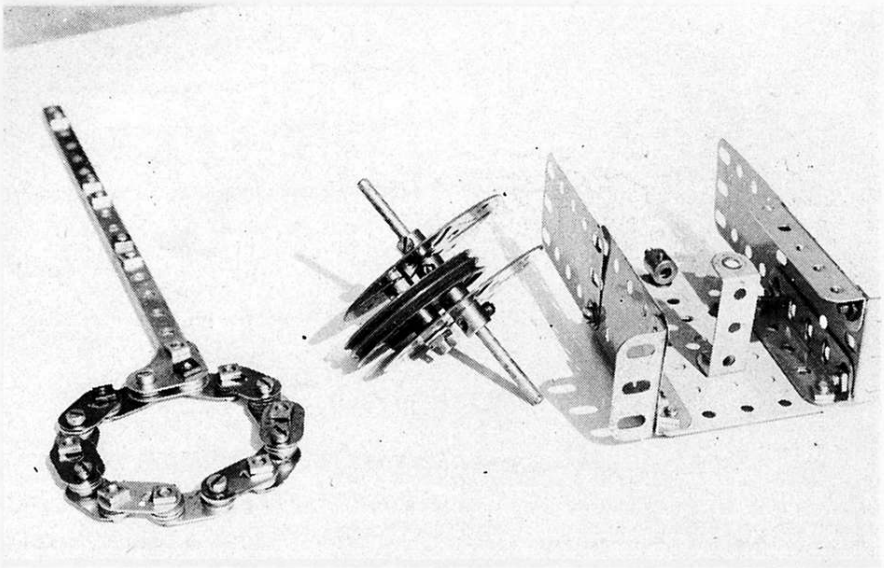

Fig. 9 (From left to right), The eccentric strap, built-up eccentric and a section of one of the two bearing supports.

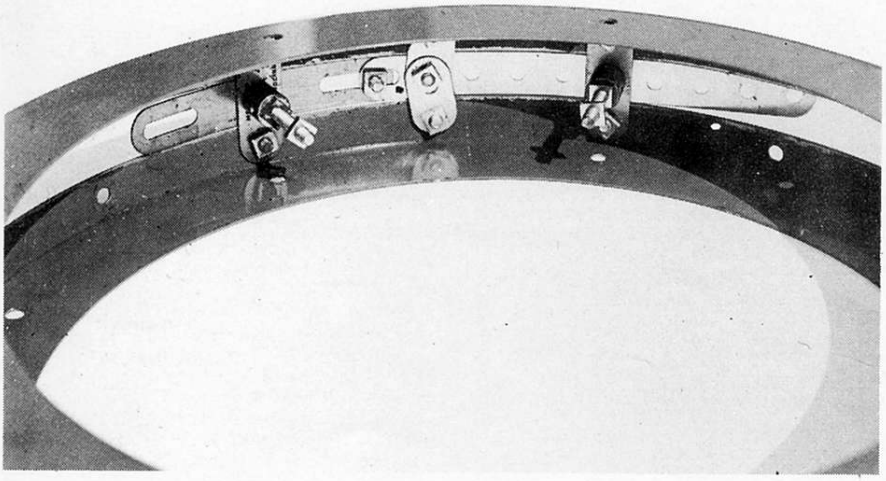

Fig. 10 Details of the flywheel's internal construction.
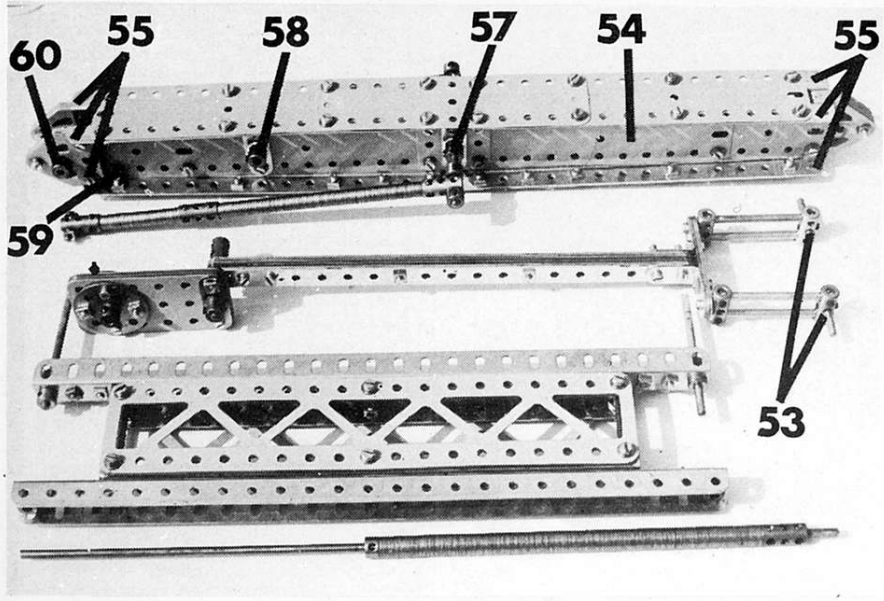
Fig. 11 Views of, (from top to bottom) the beam, crank with connecting rod, the rocking arm and at the bottom, the piston rod.