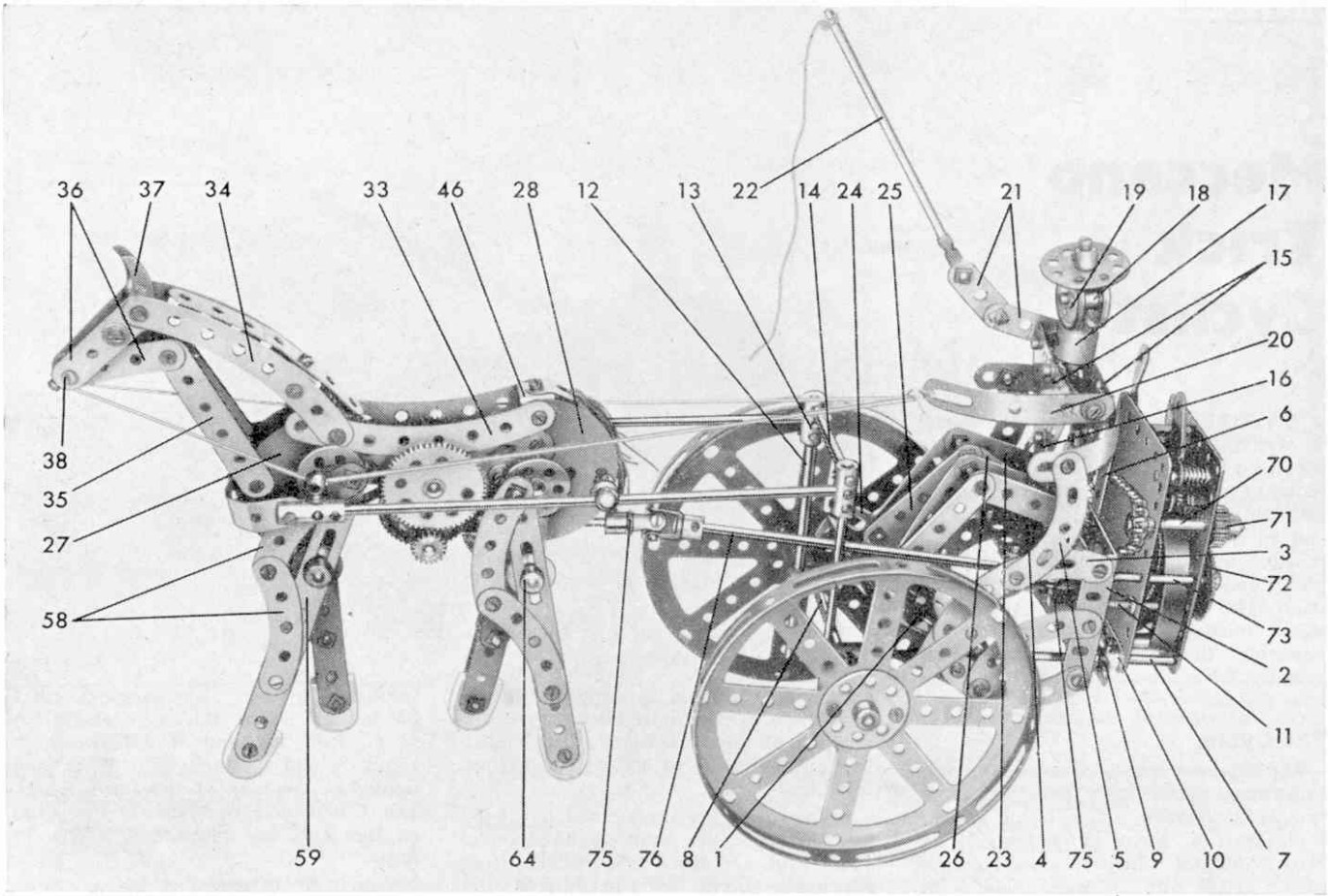


*The unique model of a Horse and Chariot. For full building instructions read this article.*

# BUILD A HORSE AND CHARIOT

NOVEL animated Meccano models have always been a particular favourite of mine. The Horse and Chariot I describe here is, I think, unique, in that the Chariot is actually pulled along by the walking movement of the horse. A No. 1 Clockwork Motor fixed to the rear of the Chariot provides the power for the model.

Everybody claims that you cannot put the cart before the horse but, for building instruction purposes, I have done just that. If you study the photographs you will see that two legs have been removed in two of them. This has been done in order to simplify decription.

### The Chariot

Two 3½ in. by 2½ in. Flanged Plates 1 and 2 are connected at each side by two Curved Strips and a 3 in. Stepped Curved Strip 3, this last extended by a Fishplate. A seat is provided by a compound 3½ in. by 1½ in. flexible plate 4, built up from two 2½ in. by 1½ in. Flexible Plates fixed to Curved Strips 3 by Angle Brackets, at the same time bolting 2½ in. Curved Strips 5 in place. Strips 5 are joined by two Formed Slotted Strips which are connected to Plate 2 by a 4½ in. Strip 6.

Mounted in Plate 2, as shown, are two 5½ in. Rods 7, each carrying a Coupling at its forward end and a Collar behind the Plate. A 6½ in. Rod 8 is journalled in the transverse bores of these Couplings, being free to turn, but held in position by Collars. A 3½ in. Strip 9 is slipped on to Rods 7 and is held against the Collars by a Crank 10 on each Rod. Also mounted on the Rods is a No. 1 Clockwork Motor which is bolted to Cranks 10. In addition, the Motor is fixed direct to Plate 2 by two 1⅛ in. Bolts 11.

Fixed in the forward transverse bore of each Coupling is a 4½ in. Rod 12 which also carries a Coupling 13 at its upper end. Couplings 13 are connected by a 3 in. Rod 14. Hub Discs, bolted to 8-hole Bush Wheels secured on Rod 8, represent the Chariot wheels.

### The Charioteer

Two 2½ in. Triangular Plates 15 are bolted, one each, to two Flat Trunnions 16, then both constructions are connected by five Double Brackets, one placed at each corner, and the last in the centre of the upper sides of the Triangular Plates. Three Washers are placed on a 1⅛ in. Bolt, which is then pushed upwards through the last-mentioned Double Bracket. A Chimney Adaptor 17 is added, and the Bolt is screwed into one side of the boss of a 1 in. Pulley 18. A 1 in. loose Pulley 19 is fixed to Pulley 18 by a ⅜ in. Bolt, a Washer being used as a spacer, and a hat is supplied by an 8-hole Bush Wheel held by another ⅜ in. Bolt screwed into the other side of the boss of Pulley 18, a Collar separating the Bush Wheel from the boss.

The left arm is represented by a Formed Slotted Strip 20, while the right arm is built up from two 1½ in. Strips 21, extended by a Rod and Strip Connector. Fixed in this is a 5 in. Rod 22, to which a short length of Cord is tied, to serve as a whip.

Each leg is formed from a 2 in. Strip 23, bolted to the respective Double Bracket, to which a 2½ in. Strip is attached by a ⅜ in. Bolt. A Fishplate 24 and another 2½ in. Strip 25 are bolted to the other end of the first 2½ in. Strip. Fastened to Strip 25 by two Nuts on the

already-mentioned $\frac{3}{8}$ in. Bolt is a $1\frac{1}{2}$ in. Strip 26.

### The horse

Both sides of the body, neck and head, are similarly built. Two Semi-Circular Plates 27 and 28, each extended by a Flat Trunnion 29 and 30 (this last extended by a $2\frac{1}{2}$ in. Strip 31), are connected by a $2\frac{1}{2}$ in Strip 32 and a 4 in. Stepped Curved Strip 33, the latter extended by another 4 in. Stepped Curved Strip 34. A 3 in. Strip 35 is bolted to Plate 27 and this is connected by two 2 in. Strips 36 to Curved Strip 34, at the same time fixing a Pawl without boss 37 in position. The sides and head are connected by a $\frac{1}{2}$ in. Bolt 38, on which a Collar is mounted, a $\frac{3}{4}$ in. Bolt on which a Threaded Boss 39 is mounted, and a Double Bracket 40, to which a $3\frac{1}{2}$ in. Strip is bolted.

A Flat Trunnion 41 is fixed direct to left-hand Strip 32, while another Flat Trunnion 42 is secured to right-hand Strip 32, but is spaced from it by a Collar on each $\frac{1}{2}$ in. Bolt. The two sides are now connected by four Double Brackets 43, 44, 45 and 46.

Journalled in Semi-Circular Plates 28 is a $1\frac{1}{2}$ in. Rod that carries a 1 in. Bush Wheel 47 (Elektrikit Part No. 518) at each end, and a 57-teeth Gear Wheel 48 in the middle. This Gear is in constant mesh with another 57-teeth Gear 49 on another $1\frac{1}{2}$ in. Rod, held in place by a further 57-teeth Gear 50. Gear 50, in turn, is in mesh with a $\frac{1}{2}$ in. Pinion 51 on a 2 in. Rod, mounted in the apex holes of Trunnions 41 and 42. Also fitted on this rod are five Washers, a Coupling 52 and a $1\frac{1}{2}$ in. Contrate Wheel 53. In mesh with Contrate 53 is a $\frac{1}{2}$ in. Pinion 54 on a 3 in. Rod 55 which is free to turn in Coupling 52 and Double Bracket 45, being held in position by a Collar 55. Two Washers separate Pinion 54 and Coupling 52.

Gear Wheel 49 is in constant mesh with yet another 57-teeth Gear 56 on a $1\frac{1}{2}$ in. Rod, journalled in Semi-Circular Plates 27. Another two 1 in. Bush Wheels 57 hold this Rod in place.

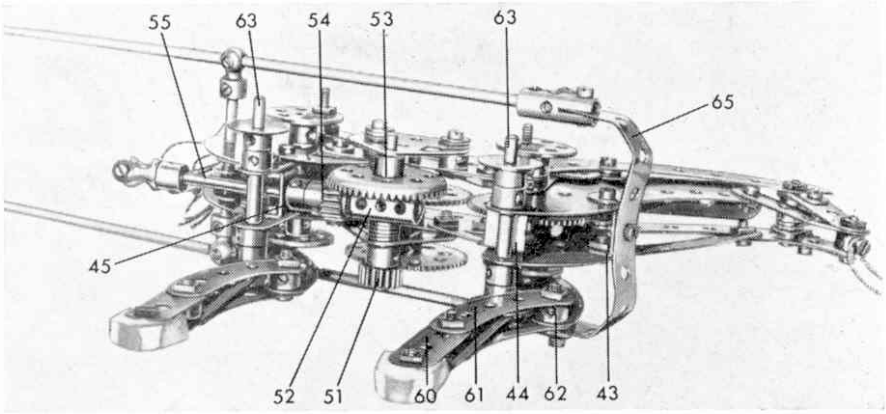


*An underneath view of the Horse.*

Four legs are built up, the two left being identical, as also are the two right. Two $2\frac{1}{2}$ in. Curved Strips 58 are joined together as shown, and bolted to a $5\frac{1}{2}$ in. slotted Perforated Strip 59. A 2 in. slotted Perforated Strip 60 and another $2\frac{1}{2}$ in. Curved Strip 61 are, in turn, joined together and connected to slotted Strip 59 and Curved Strip 58, but are spaced from them by a Collar 62 on the shank of each $\frac{1}{2}$ in. Bolt. A piece of rubber eraser, shaped as shown, is bolted between the ends of slotted Strips 59 and 60. All four legs are similarly built except that both the left and right pairs have slotted Strips 60 and Curved Strips 61 on the inside.

Two $2\frac{1}{2}$ in. Rods 63 are mounted, one in Strips 31 and the other in the bottom holes of Semi-Circular Plates 27, both being held by two Collars at each end. A $\frac{3}{8}$ in. Washer is placed on the ends of both Rods and the respective legs fitted by means of the upper slotted holes in slotted Strips 59, Collars 64 holding them in place. At their tops, the legs are lock-nutted to 1 in. Bush Wheels 47 and 57, but care must be taken with the 'timing'. The bolt fixing the left foreleg to the Bush Wheel must be at 3 o'clock when that holding the left hind leg is at 9 o'clock. At the same time, the bolt holding the right foreleg must also be at 3 o'clock when that holding the right hind leg is at 9 o'clock. A tail is provided by several short lengths of Cord tied to an Obtuse Angle Bracket bolted to Double Bracket 46.

### The Harness

A $4\frac{1}{2}$ in. Strip 65, carrying a Strip Coupling at each end, is bent to shape and bolted to Double Bracket 43. Screwed into the centre transverse tapped bores of the Strip Couplings is a Handrail Support 66. Lengths of Cord are then taken from a bolt in the horse's 'nose' through the Handrail Supports and tied to Formed Slotted Strip 20, to serve as reins. A 2 in. Rod, held by two Collars 67, and carrying a Handrail Coupling 68, at each end, is mounted in Plates 28. The horse is now harnessed to the chariot by two 8 in. Rods 69, secured in the Slotted Coupling, Handrail Couplings 68 and Couplings 13.

All that now remains to be done is the gearing down of the Motor and the coupling-up of the drive to the horse. A $\frac{3}{4}$ in. Sprocket Wheel on the Motor output shaft is connected by Chain to a 1 in. Sprocket Wheel on a 2 in. Rod 70, journalled in the Motor side plates and held by a $\frac{3}{4}$ in. Pinion 71. This Pinion is in mesh with a 50-teeth Gear 72 on a 2 in. Rod 73 that protrudes through Flanged Plate 2. Rods 73 and 55 are connected, via two Universal Couplings 74 and 75, by a $5\frac{1}{2}$ in. Rod 76.

*The Horse viewed from above.*

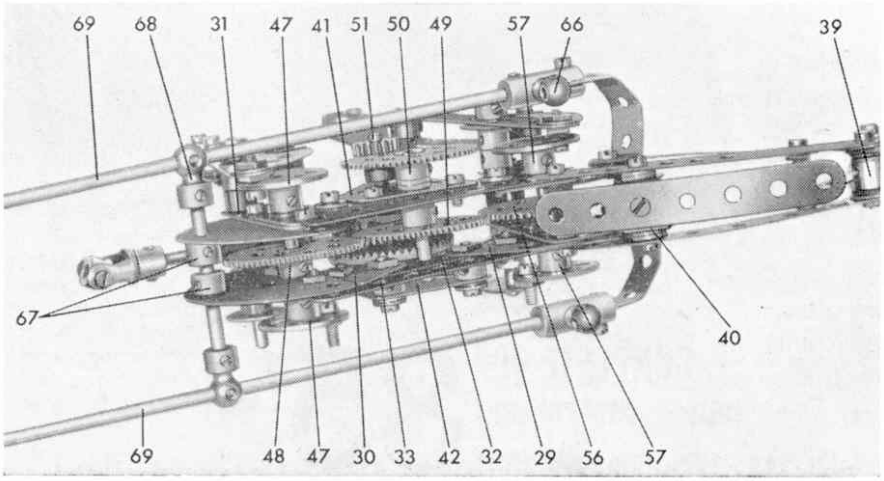


**Spanner**

| Partsrequired | | |
|---|---|---|
| 2 of No. 2a | 1 of No. 25 | 1 of No. 96 |
| 2 of No. 3 | 2 of No. 26 | 1 of No. 96a |
| 2 of No. 4 | 1 of No. 27 | 5 of No. 111 |
| 8 of No. 5 | 4 of No. 27a | 11 of No. 111a |
| 6 of No. 6 | 1 of No. 28 | 12 of No. 111c |
| 4 of No. 6a | 119 of No. 37a | 3 of No. 111d |
| 4 of No. 10 | 82 of No. 37b | 2 of No. 118 |
| 10 of No. 11 | 51 of No. 38 | 8 of No. 126a |
| 4 of No. 12 | 4 of No. 38d | 2 of No. 136 |
| 1 of No. 12c | 1 of No. 40 | 2 of No. 136a |
| 2 of No. 13a | 2 of No. 53 | 2 of No. 140 |
| 1 of No. 14 | 4 of No. 55 | 2 of No. 147c |
| 3 of No. 14a | 4 of No. 55a | 1 of No. 164 |
| 1 of No. 15 | 31 of No. 59 | 2 of No. 188 |
| 2 of No. 15a | 2 of No. 62 | 1 of No. 212 |
| 3 of No. 16a | 5 of No. 63 | 4 of No. 214 |
| 2 of No. 16b | 2 of No. 63b | 3 of No. 215 |
| 3 of No. 17 | 2 of No. 72 | 4 of No. 518 |
| 3 of No. 18a | 2 of No. 89a | 1 No. 1 Clock-work Motor |
| 1 of No. 22 | 4 of No. 89b | 4 pieces rubber eraser |
| 1 of No. 22a | 12 of No. 90 | |
| 3 of No. 24 | 6 of No. 90a | |
| | 1 of No. 94 | |

Magnificent Meccanograph 32—33

Meccanomen around the world and Elastic Band Gun 35

Meccano Road Grader 38

MECCANO
DINKY TOYS AND TRIANG-HORNBY

by Spanner

# A Magnificent Meccanograph

ONE of the most fascinating gadgets that can be built in Meccano is the Meccanograph—an ingenious pattern-producing machine.

Credit for designing the original model is due to Mr. Andreas Konkoly of Budapest, Hungary, and building instructions are given below. However, before starting, I must stress that when I refer to 'above' and 'below', I am assuming that the model is in an upright position.

## Framework

A rectangle is built up from two 9½ in. Angle Girders 1, connected three holes from each end by two 5½ in. Angle Girders 2 and 3, Girder 2 being fixed in place by Rod Sockets. Mounted in each of these is a 1½ in. Rod 4 carrying two Collars. At one end the rectangle is further strengthened by a 5½ in. Flat Girder 5, to both ends of which an Angle Bracket 6 and a ½ in. Reversed Angle Bracket are bolted. The Reversed Angle Brackets are joined by a 4½ in. by ½ in. Double Angle Strip 7.

To the opposite ends of Girders 1 are bolted a 3½ in. Strip 8 and a 3 in. Strip 9. Strips 9 are joined, via Angle Brackets, by a 5½ in. Strip 10. A 2½ in. Flat Girder is fixed to the side flange of Girder 1 and to Angle Bracket 6, then is connected to Strips 8 and 9 by a 9½ in. Angle Girder 11. Angle Girders 11, at each side, are joined by two 5½ in. Angle Girders 12.

Also fixed to Girders 11 is a 5½ in. Strip 13 held by 1⅛ in. Bolts each carrying two Collars and a 1 in. fixed Pulley with Tyre, while the 2½ in. Flat Girders are joined via Angle Brackets, by a 5½ in. Angle Girder 14. This Girder is attached to the Angle Brackets also by 1⅛ in. Bolts carrying two Collars and a 1 in. fixed Pulley with Tyre.

## Revolving Table and Gearbox

It is best to build the revolving table and its corresponding gearbox separately. A frame is obtained from two 3½ in. Angle Girders 15, connected by a 4½in. by 2½ in. Flat Plate. Two 2½ in. by ½ in. Double Angle Strips bolted one to each Angle Girder 15, are joined by a 4½ in. Strip 16, a Washer spacing the Strip from the lug of each Double Angle Strip. Also bolted to the Double Angle Strips are Angle Brackets which are joined, in turn, by another 4½ in. Strip 17.

Journalled in a six-hole Bush Wheel, bolted to the underside of the Plate to act as a bearing and in Strips 16 and 17, is a 3½ in. Rod 18, held in place by a six-hole Bush Wheel above the Plate and by a 3½ in. Gear Wheel 19 beneath Strip 16. This Gear has been removed in one of the accompanying illustrations. Mounted on the Rod, between the lower Bush Wheel and Strip 17 are, in order, a 50-teeth Gear 20, a Collar, a Washer, another Collar, a 60-teeth Gear 21 and a 57-teeth Gear 22. Also mounted on the Rod, but between Strips 17 and 16, are two Washers, a 2½ in. Gear 23 and another Washer.

Journalled in the Flat Plate and Strip 17 is a 2½ in. Rod which carries, from top to bottom, a Washer, a ¾ in. Pinion 24, a Washer, a Coupling 25, mounted through its centre transverse bore, another Washer, a 7/16 in. Pinion 26 and a ½ in. Pinion 27. Pinion 24 is in mesh with Gear 20, Pinion 26 with Gear 21 and Pinion 27 with Gear 22.

A 1½ in. Rod carrying a ½ in. Pinion 28 and a Washer above Strip 17 and another ½ in. Pinion 29 between the Strips, is journalled in Strips 16 and 17. Pinion 28 is meshed with Pinion 27 and Pinion 29 with Gear 23.

Also journalled in Strips 16 and 17 is a 2 in. Rod. This carries a Collar, a ½ in. Pinion 30 and a Washer above Strip 17, and two Washers and a ½ in. Pinion 31 beneath Strip 16. Pinion 30 meshes with Pinion 28 and Pinion 31 with Gear 19.

Mounted in the longitudinal bore of Coupling 25 and in the Double Angle Strip bolted to one Angle Girder 15 is a 2½ in. Rod that carries a ¾ in. Contrate Wheel 32, in mesh with Pinion 24 and a six-hole Bush Wheel 33. The Rod is secured by two Collars, fixed one each side of the Double Angle Strip.

The whole assembly is positioned in the main framework on two 8 in. Rods mounted in Girders 2 and 3 and held by Collars.

## Additional Gearing

A 5 in. Rod, on which a ½ in. Helical Gear 34 and a Worm 35 are mounted, is journalled in Strips 8 being held in place by a Collar and a Crank. A 1⅛ in. Bolt, supporting a loose Coupling is fixed to the arm of the Crank to act as a handle. The Worm is in mesh with a 57-teeth Gear 36 on a 4 in. Rod mounted in Strips 10 and 13. Also secured on this Rod are a 50-teeth Gear 37, two Collars, and a ¾ in. Pinion 38, this last unmeshed at present.

Another 4 in. Rod is journalled in Strips 10 and 13. On this is mounted, in order from top to bottom, a Single Throw Eccentric 39, a Washer, a ⅞ in. Bevel Gear 40, a Collar, a Coupling 41, another Collar, a 50-teeth Gear 42 (unmeshed at present), two Washers, a ¾ in. Pinion and a third Collar. Gear 37 meshes with Pinion 43.

Yet a third Rod, a 4½ in., is journalled in Strips 10 and 13. On this is secured a Face Plate 44, a 1½ in. Helical Gear 45, two Washers, three Washers and a 50-teeth Gear 46. Helical Gear 45 meshes with Helical Gear 34.

A 1½ in. Rod is mounted in the longitudinal bore of Coupling 41 and in the apex hole of a Trunnion 45, bolted to Angle Girder 3. Fixed on the Rod is an eight-hole Bush Wheel 47, a Collar, three Washers and a ⅞ in. Bevel Gear 48. This last meshes with Bevel Gear 40, while Bush Wheel 47 is connected to Bush Wheel 33 by two ¾ in. Bolts, fixed in diametrically opposite holes of Bush Wheel 33 with their shanks projecting through corresponding holes in Bush Wheel 47.

The arm of Eccentric 39 is extended two holes by a 2 in. Strip, through the end hole of which a Threaded Pin is fixed. The shank of the Pin, in turn, is passed through the circular hole in one lug of an Angle Bracket, attached to Angle Girder 3 by Bolt 49.

At the other end of the model, a 5 in. Rod 50 is journalled as shown, being held

in place by a Collar and a 50-teeth Gear 51 with a Washer acting as a spacer. Two Face Plates 52 with three ¾ in. Bolts passed through them, are also fixed on the Rod to serve as a cam working against the pen arm.

The pen arm itself, is an 11½ in. Rod held in a Handrail Coupling 53 fixed to a 4½ in. Rod mounted in two 1½ in. Flat Girders bolted to Angle Girders 1 and 11. A Collar above the upper Flat Girder prevents the Rod from falling through. Loose, on the 11½ in. Rod is a Coupling 54 that carries a Long Threaded Pin 55, a Handrail Support 56 and a Threaded Pin 57. Secured on Pin 57 is a Small Fork Piece in which a ball-point pen is clamped by a ½ in. Bolt. A 2 in. Rod is fixed in Handrail Support 56 and a Cone Pulley is added to act as a weight.

Two Handrail Supports 58 are attached to Face Plate 44, and in these a 2½ in. Rod is mounted. Fixed on this Rod is a four-hole Collar, Part No. 140y, in which a Threaded Pin 59 is mounted. Another four-hole Collar is added to Long Threaded Pin 55 then a 7½ in. Strip 60 is slipped over Pins 55 and 59.

The pin arm is kept in contact with the cam by a Driving Band wrapped round one of the Rods 4 and round the 11½ in. Rod, being prevented from sliding by two Collars. The actual revolving table is a disc made of wood or another suitable material, bolted to the Bush Wheel at the top of Rod 18.

Finally, an 8 in. Rod 61, with a 1½ in. Contrate Wheel at each end is mounted in Girders 12, Washers being used as spacers so that the Contrates mesh with Gears 46 and 51.

## Varying the Pattern

Many different patterns can be obtained in several ways. The length of Strip 60 can be altered by fitting Pin 59 in different holes or the cam can be modified by changing the number and position of the Bolts. Also, Pinion 43 can be taken out of mesh with Gear 37, while Pinion 38 is brought into mesh with Gear 42. Even the pen arm, itself, can be moved to the other side of the cam, provided that the Driving Band is transferred to the other Rod 4.

## Parts Required

| | | |
|---|---|---|
| 1 of No. 1b | 2 of No. 24b | 1 of No. 103 |
| 2 of No. 2 | 3 of No. 25 | 2 of No. 103f |
| 2 of No. 2a | 5 of No. 26 | 2 of No. 103h |
| 2 of No. 3 | 1 of No. 26c | 3 of No. 109 |
| 2 of No. 3a | 5 of No. 27 | 5 of No. 111 |
| 2 of No. 6 | 2 of No. 27a | 3 of No. 111a |
| 4 of No. 8a | 1 of No. 27b | 5 of No. 111d |
| 5 of No. 9 | 1 of No. 27c | 3 of No. 115 |
| 2 of No. 9b | 1 of No. 27d | 2 of No. 115a |
| 9 of No. 12 | 2 of No. 28 | 1 of No. 116a |
| 1 of No. 13 | 1 of No. 29 | 1 of No. 123 |
| 3 of No. 13a | 2 of No. 30 | 2 of No. 125 |
| 1 of No. 14 | 1 of No. 32 | 1 of No. 126 |
| 1 of No. 15 | 69 of No. 37a | 1 of No. 130a |
| 2 of No. 15a | 56 of No. 37b | 3 of No. 136 |
| 2 of No. 15b | 78 of No. 38 | 1 of No. 136a |
| 1 of No. 16 | 2 of No. 48a | 2 of No. 140y |
| 3 of No. 16a | 1 of No. 48c | 4 of No. 142c |
| 2 of No. 17 | 1 of No. 53a | 2 of No. 179 |
| 4 of No. 18a | 32 of No. 59 | 1 of No. 186a |
| 4 of No. 22 | 1 of No. 62 | 1 of No. 221a |
| 1 of No. 24 | 4 of No. 63 | 1 of No. 221b |

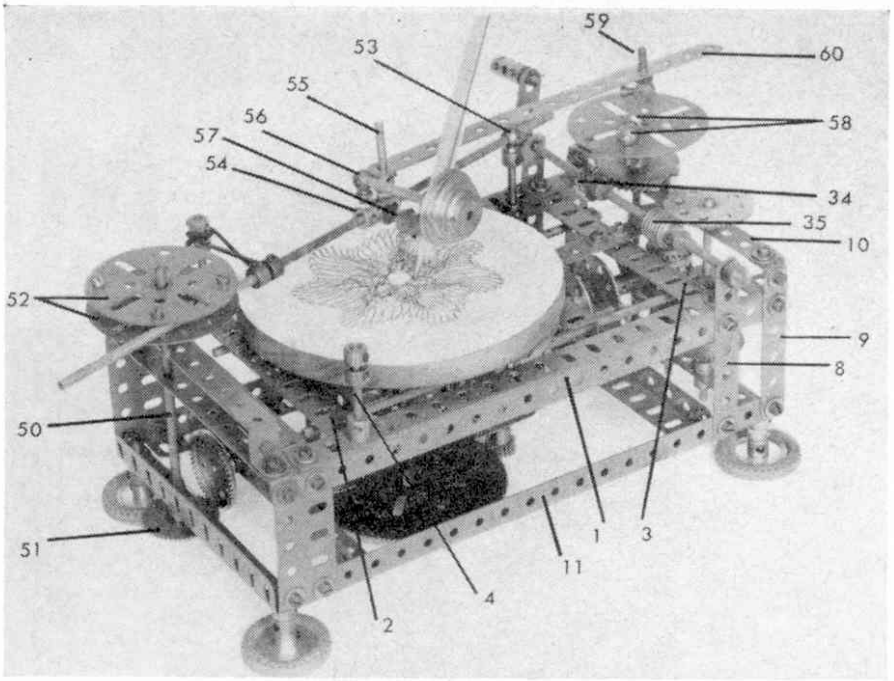


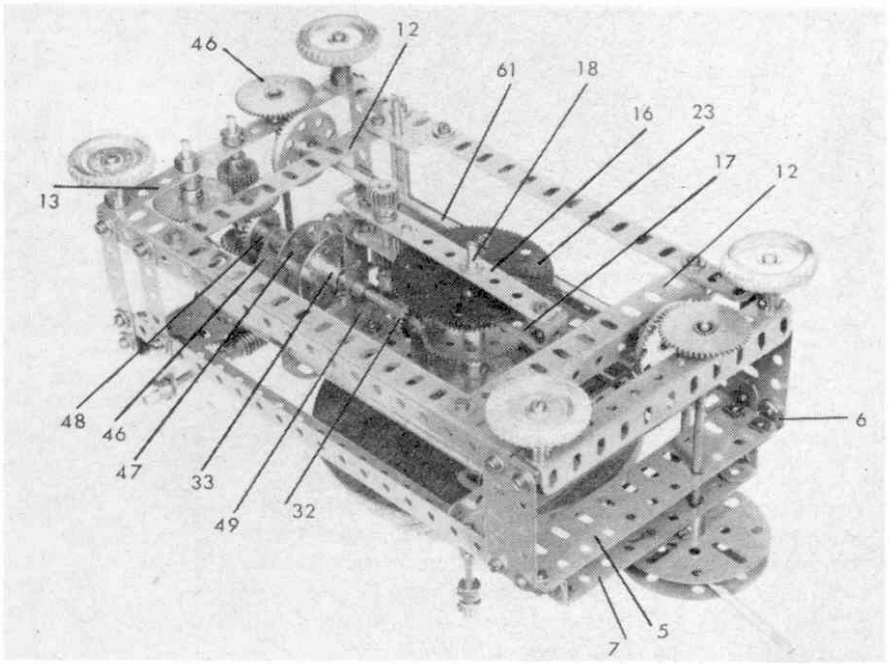


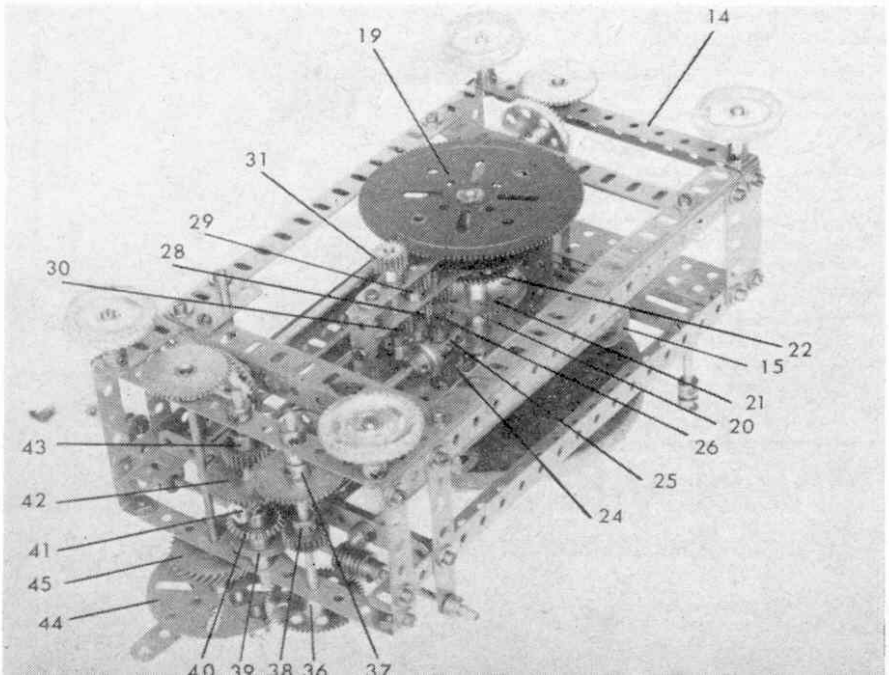

Completely out of the ordinary run of Meccano models is this amazing "Centipede," designed by Mr. Andreas Konkoly of Budapest, Hungary.

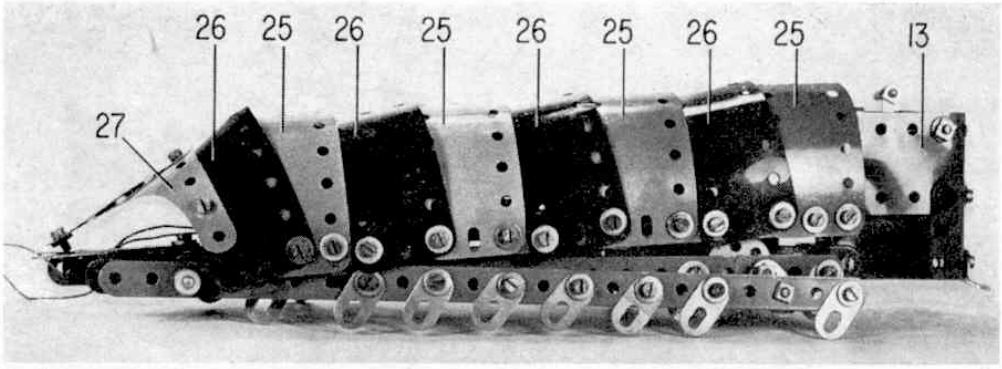


# Watch out for the . .

# . . HUNGARIAN CENTIPEDE

says 'Spanner'

MECCANO MODEL-BUILDERS OF DISTINCTION can be found in nearly every country of the world. Some we know about, others we don't. Most work away in quiet anonymity, but a dedicated minority are loud in their praise of Meccano and do all in their power to make the system as widely-known as possible; not for any personal gain, but purely to interest other people in a hobby which offers them endless enjoyment. A gentleman who leads in this latter category is undoubtedly Mr. Andreas Konkoly of Budapest, Hungary.

As long-standing readers of Meccano Magazine will know, Mr. Konkoly has been a keen and highly capable modeller for many years. He has done much to promote Meccano, on a purely personal basis, in Hungary, and has even appeared several times on Hungarian television with models he has built. Among international Meccano circles, he is perhaps best-known for several outstanding Meccanograph designing machines, at least two of which we have featuured in these pages in the past. He is, in my opinion, one of the world's leading authorities on this type of model, although I must hastily stress that his model-building capabilities are not limited only to Meccanographs. On the contrary, he has produced a wide variety of different types of models, all clearly designed without being over-complicated, and covering the most unusual subjects. And if you don't believe me, just look at the model featured here—a Meccano Centipede ! How's that for an unusual subject ?

Like all Mr. Konkoly's models the Centipede is fully mobile, trudging along with a fascinating action on its multiple feet. Power can be supplied either by a Magic Clockwork Motor, or by a 3-12 volt Motor with 6-ratio Gearbox and, in fact, the model illustrated is fitted with both units to show their relative positions. In a "production" model, of course, only the one chosen Motor would be used.

Despite the intricate movements of the model, construction is not difficult. A strong framework is built up from two $9\frac{1}{2}$ in. Angle Girders 1, joined together at one end by a $2\frac{1}{2} \times \frac{1}{2}$ in. Double Angle Strip 2 and, through the second holes from the other end, by a similar Double Angle Strip 3. Attached to the centre of Double Angle Strip 2, but spaced from it by a Collar on the shank of the securing $\frac{1}{2}$ in. Bolt, is a Double Bracket 4, to the lugs of which two $9\frac{1}{2}$ in. Strips 5 are bolted, the fixing Bolts passing through the second holes of the Strips. Secured to the other end of each of these Strips is a $1 \times \frac{1}{2}$ in. Angle Bracket 6, the rearmost securing Bolt helping to fix a Flat Trunnion 7 to the Strip, apex pointing upwards. The free lugs of Angle Brackets 6 are connected by a $1 \times \frac{1}{2}$ in. Double Angle Strip 8.

Strips 5 are further connected by another Double Bracket secured through the eighth holes from the rear ends of the Strips, then journalled in the third holes from their front ends is a $1\frac{1}{2}$ in. Rod, on the centre of which a 60-teeth Gear Wheel 9 is mounted. This Gear meshes with a $\frac{7}{16}$ in. Pinion 10 on a 1 in. Rod journalled in the apex holes of Flat Trunnions 7 and held in place by a 1 in. Pulley 11.

At this stage, the required Motor can be fitted. If the combined Motor and Gearbox is to be used, this is simply attached by Angle Brackets to Strips 5, with a Worm on the output shaft engaging with Pinion 10. If, on the other hand, the Magic Motor is to be used, this is attached by one corner, as shown, to Double Angle Strip 8, being spaced from it by a Washer and Collar 12 on one securing $\frac{1}{2}$ in. Bolt, and by three

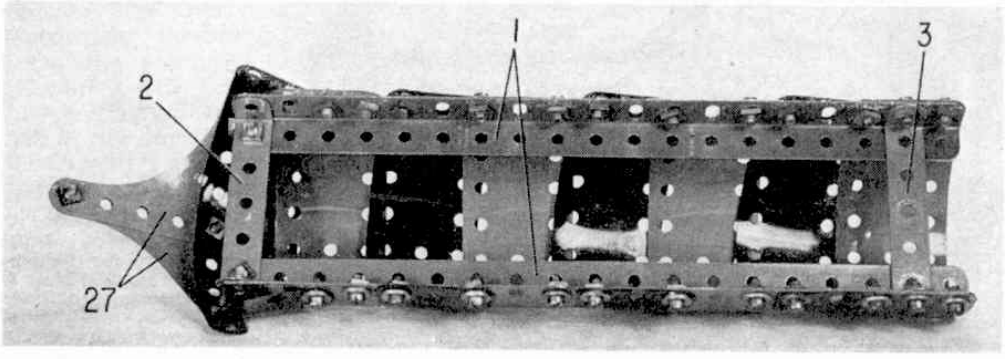


An underside view of the Centipede's body showing the main strengthening Angle Girders.

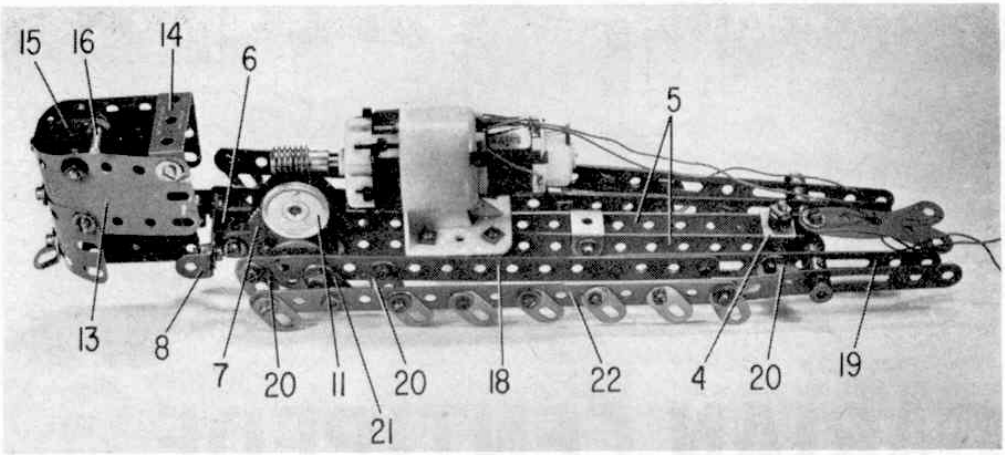


With the body removed, the comparatively simple construction of the model becomes evident. Note that the two Motors have been included to show their relative positions, but only one of them is required for operation.

Washers on the other securing ½ in. Bolt. The output Pulley is connected by a Driving Band to Pulley 11. The Motor brake projects upwards.

The Centipede's head is supplied by a 5½ × 1½ in. Flexible Plate 13. Plate 13 is curved round and attached to the upper front corners of the Magic Motor by ½ in. Bolts, but is spaced from the Motor by a Pin 16 is fixed to the Motor brake lever to make it more easily accessible.

If the Magic Motor is not to be used, a substitute mounting for the head must be provided and I suggest that two 2½ in. Strips bolted to the lugs of Double Angle Strip 8 would be perfectly adequate.

Returning to the Rod carrying Gear Wheels 9, two

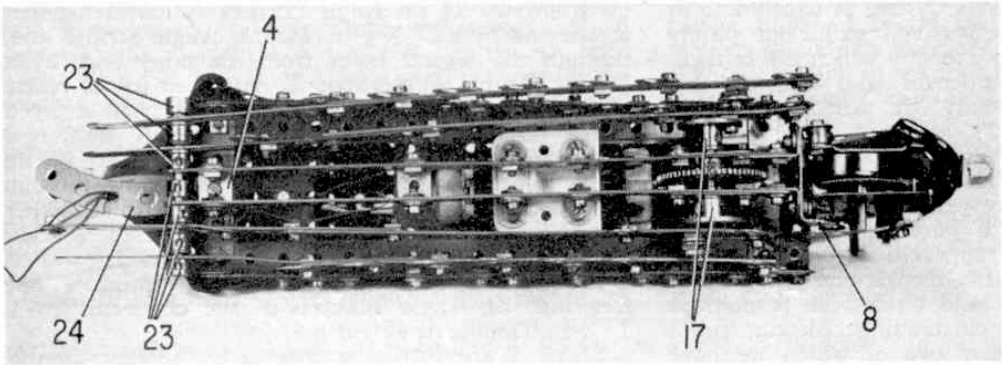


A general underside view of the model showing the layout of the Strips to which the "legs" are attached.

Collar on the shank of each Bolt. The upper rear corners of the Plate are connected by a 1½ × ½ in. Double Bracket 14, the right-hand securing Bolt also fixing the Plate to the Motor, with a Collar again acting as a spacer. The top of the Motor is partially covered by a 1 × ½ in. Angle Bracket 15 bolted to the upper edge of Plate 13, as shown, and a Short Threaded

electrical 1 in. Bush Wheels 17 are mounted one on each end of the Rod. Lock-nutted by ½ in. Bolts and Nuts to the face of each of these Bush Wheels is a 7½ in. Strip 18, extended by a 5½ in. Slotted Strip 19, the two Strips overlapped four holes. Three Fishplates 20 are bolted, in the positions shown, to Strips 18 and 19, then another Fishplate 21 is pivotally-

(please turn to page 190)

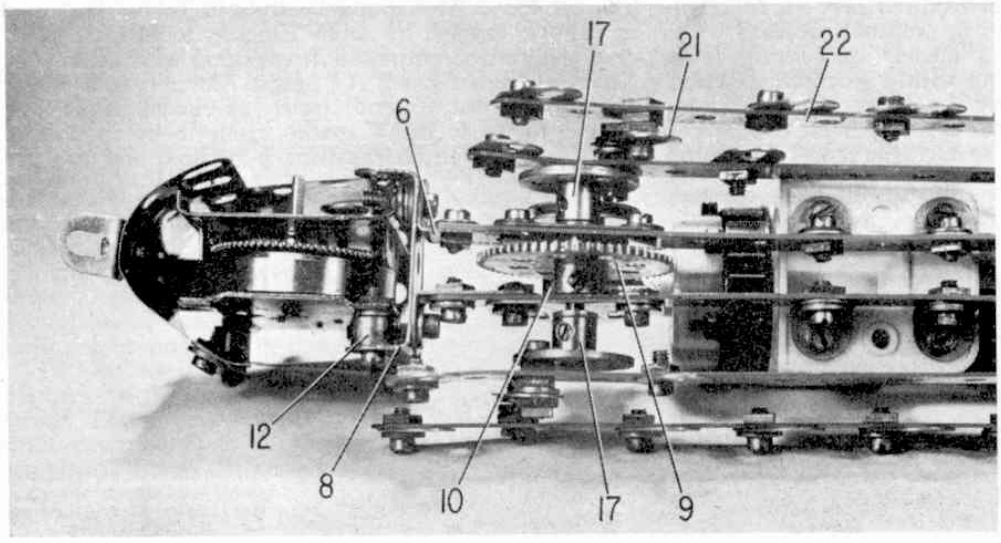


A close-up view of the drive system for the legs. Note that Bush Wheels 17 are the special 1 in. items included in the range of Meccano electrical parts.

A mile or two further revealed the culprit—an express freight rightly shunted onto a slip road, and I wondered how any signalman could have accepted it, knowing that the 'flyer' was due. I hope its crew realised the enormity of their impertinence! As I hoped they might forgive the fist I shook at them!

It was not until we were approaching Reading that I realised we might, at least, maintain schedule and arrive at Paddington on time. As we plunged headlong towards the junction, whistling continuously, I glanced at my watch. Thirty six miles to go. Twenty eight minutes left. Could it be done?

Into Sonning cutting and a chance to check the speed. The quarter mile posts alongside the track are ideal for this and my stop watch clicked. Nine seconds to the next post! One hundred miles an hour! I felt sure that I must have miscalculated and re-checked. Again the magic nine seconds showed. Maintain schedule indeed! We could do it in the hour!

Twyford! Just a blur as we hurried through, never slackening the electrifying dash towards our goal. Maidenhead, Slough, Ealing Broadway, still eating up the miles effortlessly until the first gentle touch on the brakes heralded the end of an unforgettable journey.

Past Old Oak sidings, slowing quickly now, through Westbourne Park, admiring glances from railwaymen along the track as 'Cardiff Castle' threaded her way into the terminus where she came to rest at platform seven.

Despite a dead stop she had covered the 77¼ miles in precisely 57 minutes. Incredible, but true.

There are, alas, no such journeys nowadays. Semi-automatic ugly monsters, seemingly without character, haul our expresses and warrant hardly a second glance. I try to work up some enthusiasm for them but they remain colourless monsters.

For those, like me, who live in peaceful Devon, all is not entirely lost. On any summer day I can proceed to Buckfastleigh, headquarters of the Dart Valley Light Railway, and board a train for Staverton and Totnes. And savour again the sight, the sound and the smell of *steam*. Long may it be so!

---

**CENTIPEDE** (*continued from page* 188)

mounted on the protruding shank of the Bolt lock-nutted in the face of the Bush Wheel. Lock-nutted, in turn, to the end of this Fishplate is another 7½ in. Strip/5½ in. Slotted Strip arrangement 22, another seven Fishplates being bolted to this to serve as the Centipede's legs.

Now mounted in the end holes in Strips 5 and in the rear slots of the Slotted Strips is a 2½ in. Rod, each Strip being spaced from its neighbour by a Collar 23, a Washer also being provided at each side of the Slotted Strips. A ⅜ in. Bolt, carrying two 2½ in. Curved Strips 24 to serve as the tail, is screwed into one transverse bore of the centre Collar.

This brings us to the body and, here again, no great difficulty is involved. Four 5½ × 1½ in. Flexible Plates 25 and five 5½ × 1½ in. Plastic Plates 26 are simply curved over and bolted to the vertical flanges of Angle Girders 1, the Plastic Plates being angled slightly by means of their elongated holes to give the "ridged" appearance of the typical centipede. Bolted to the rearmost Plastic Plate are two Flexible Gusset Plates 27, overlapped as shown, to cover the tail and round off the body nicely.

Having seen Mr. Konkoly's Hungarian Centipede in motion, I can confirm its operational success. Indeed, everyone in the office, watching it whirring and clanking along, found it nothing short of hilarious and the fact that its gait can be altered by changing the positions of Bush Wheels 17 in circular relation to each other, makes it all the more interesting. It qualifies as one of the best totally ususual models we have seen for a long time.

**PARTS REQUIRED**

| | | | |
|---|---|---|---|
| 2—1a | 1—22 | 4—55 | 5—189 |
| 4—1b | 1—26 | 8—59 | 4—194d |
| 2—8a | 1—27a | 2—90 | 2—201 |
| 22—10 | 90—37a | 4—111a | 2—518 |
| 2—11 | 70—37b | 2—111c | 1 Magic Motor |
| 3—12b | 62—38 | 1—115 | or 1, 3-12v. d.c. |
| 1—12c | 1—48 | 2—126a | Motor with |
| 1—18b | 2—48a | 1—188 | Gearbox |

**ADDITIONAL PARTS, IF MAGIC MOTOR USED**

| | | | |
|---|---|---|---|
| 2—37a | 4—38 | 4—59 | 5—111a |
| | | | 1—186a |

**ADDITIONAL PARTS, IF MOTOR WITH GEARBOX USED**

| | | | |
|---|---|---|---|
| 4—12 | 1—32 | 8—37a | 8—37b |
| | | | 4—38 |

---

# MODELS AT THE M.E. EXHIBITION

**The Model Engineer Exhibition is staged by Model & Allied Publications, publishers of ten model/hobby magazines, which of course include Meccano Magazine.**

**This year's show was the 40th, and there were some wonderful models there, of which the pictures opposite give only a glimpse. The top one shows part of a hand-carved chess set, based on Tenniel's drawings for "Alice Through the Looking Glass," and you will be able to pick out such characters as the Walrus and the Carpenter, Tweedle-dum and Tweedle-dee, and all the others. They won a silver medal for Mr. S. F. Snedker.**

**The Aveling & Porter steamroller won the premier award, the Duke of Edinburgh Trophy, for its builder, Miss Cherry Hinds, seen in the picture. It is a working model of incredible accuracy and workmanship; many men model engineers said they'd better take up knitting! Opposite it is the champion working ship model, the paddle-steamer "Duchess of Fife", built by D. A. Ford.**

**"Virginia" is an American-type 4-4-0 locomotive in 3½ in. gauge, built by D. C. Piddington and K. A. Hughes, and again a working model of course. The artillery piece and limber was by K. Rains, and the ploughing engine by C. Tyler and J. Haining, one of those which gave demonstrations of steam ploughing during the exhibition. A shipwreck is seen next, the barque "Herzogen Cecilie" aground off Devon; the model is only about 6 in. long and won the miniature ship championship for D. Hunnisett.**

**At the bottom we have an unusual monorail steam locomotive, 16 mm. scale, by D. A. Boreham, and a very detailed non-flying Spitfire by W. A. Nicholls. These and hundreds more models attracted record crowds to the Exhibition.**

# Laughs Galore with the MECCANO MONKEY

## A "FUN" MODEL FROM HUNGARY

Described by "Spanner"

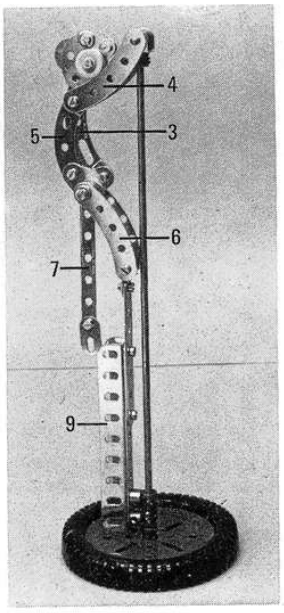


Down . . .

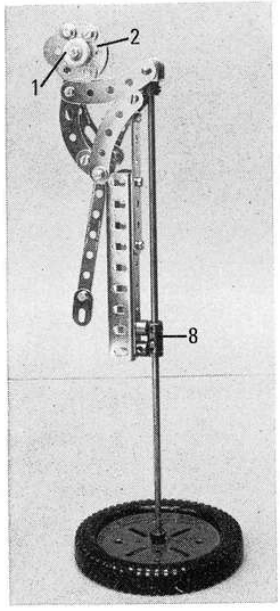


Up . . .

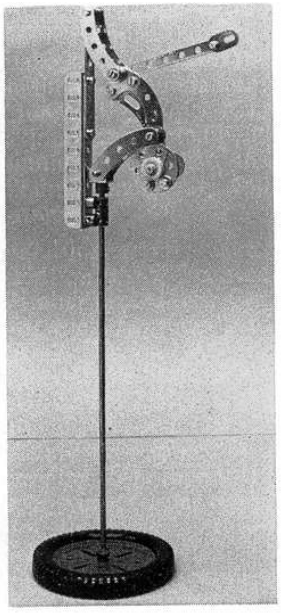

And Over!

**Three views of the Meccano Monkey as it performs an acrobatic trick. Full credit for the model goes to Mr. Andreas Konkoly of Budapest, Hungary.**

IF I was to mention the name Andreas Konkoly to an experienced Meccano modeller, the chances are his immediate comment would be: 'Ah! Yes, the Meccanograph man'. And this would be the expected reaction, for Mr. Konkoly, of Budapest, Hungary, is probably one of the best known designers of Meccanograph pattern-drawing machines throughout the whole Meccano fraternity. His interest, however, is by no means limited exclusively to such models. He also has another love, which he describes quite simply as "building animal figures".

Animal figures may seem a far cry from meccanographs, with all their intricate movements and counter-movements, but then Mr. Konkoly always manages to build plenty of fascinating movement into his animals. Two examples featured in past issues of the M.M. immediately spring to mind: a walking horse, towing a chariot, and a centipede which rattled briskly along. Both these models were fairly advanced constructions, but Mr. Konkoly has now come up with another, equally captivating, yet very much simpler offering in the shape of the Meccano Monkey featured in the accompanying photographs. When the handle 9 is jiggled about, the Monkey performs surprisingly realistic gymnastics. It's a marvellous little "fun" model which should keep "youngsters" amused for hours. (It certainly amused us!).

### CONSTRUCTION

Dealing first with the Monkey, itself, the head is built up from, in order, a ½" plastic Pulley without Boss 1, a 1" Triangular Plate, a 6-hole Wheel Disc 2 and two ¾" Washers, the last serving as ears and sandwiched against the Wheel Disc by a third ¾" Washer. All are secured along with a 3" Stepped Curved Strip 3, on a ½" Bolt. Two ordinary Washers are held by Bolts in the upper holes of the Wheel Disc to represent eyes.

In the case of the arms, fitted loose on a ¾" Bolt, again in order, are a 2½" Curved Strip 4, a Collar and a 2½" Stepped Curved Strip 5. The Bolt is then passed through the upper elongated hole of Curved Strip 3; a second Collar and second 2½" Curved Strip are added, and all are then pivotally held in place by two lock-nuts. The lower ends of Stepped Curved Strips 3 and 5 are connected by a 1" Corner Bracket, using the lower elongated hole of Strip 5 and the end hole of Strip 3.

Passed through the corner hole of the Corner Bracket is a ¾" Bolt, this carrying in order, a Washer, a 2½" Curved Strip 6, four Washers, the Corner Bracket and Curved Strip 5, a 3½" Narrow Strip 7, four more Washers and a second 2½" Curved Strip, followed by two lock-nuts. The two Curved Strips serve as the Monkey's legs, while the Narrow Strip represents its tail. A Fishplate is bolted to the lower end of the Narrow Strip to act as the tail-tassel.

With the Monkey completed, the operating handle 9 is supplied by two 4½" Angle Girders, bolted together to form a "U" section girder, the upper fixing Bolts also holding two 3½" Strips in place, one on top of the other for strength. These Strips extend the girder three holes upwards. A right-angled Rod and Strip Connector is bolted to the upper ends of the Strips, while a Coupling 8 is attached, as shown, to the lower end of the girder, being spaced from it by a Collar on the shank of each securing 3/8" Bolt. The legs of the Monkey are pivotally attached to the Rod and Strip Connector by a lock-nutted ¾" Bolt, while the Coupling slides on an 11½" Rod fixed in the boss of a 3" Pulley with Motor Tyre.

To complete the model, a large Fork Piece is fixed by its boss on the upper end of the Rod. The legs of the Monkey are then pivotally attached to the lugs of this Fork Piece by a 1" Rod held in place by two Collars between the lugs. Note that this, and all the other pivoting joints in the model must move freely.

**PARTS REQUIRED**

| | | | |
|---|---|---|---|
| 2- 3 | 1-24c | 1- 63 | 1-111a |
| 2- 9a | 15-37a | 1- 77 | 2-111c |
| 1-10 | 8-37b | 1- 89a | 1-116 |
| 1-13 | 12-38 | 4- 90 | 1-133a |
| 1-18b | 3-38d | 1- 90a | 1-212a |
| 1-23 | 6-59 | 3-111 | 1-235b |