ANOTHER FINE NEW MODEL

Fire Escape with Extending Ladder

IN building the model Fire Escape shown in Fig. 1, it is best to commence with the chassis. For this two compound angle girders 1 and 2 (Fig. 3) are required, and they are each built up with two 12½″ Angle Girders, overlapped nine holes. These compound angle girders are joined together at the rear ends by 5½″ × ½″ Double Angle Strips 3 and 4.

To the lugs of the Double Angle Strip 3, a 2½″ Curved Strip 5 (Fig. 2), a 2½″ Strip 6 and a 2½″ × 1½″ Flexible Triangular Plate are bolted. The lugs of the Double Angle Strip 4, support a 2½″ Strip 7, a 1½″ Strip 8 and a 2½″ × 1½″ Flexible Plate, extended by a 2½″ Curved Strip 9 and a 2½″ × 1½″ Triangular Flexible Plate. The Curved Strips 5 and 9 are joined together by a 2½″ Stepped Curved Strip. A 5½″ Strip is bolted to the upper ends of the Strips 6 and 7, and the same bolts secure two 5½″ × 2½″ Flanged Plates. The rear end is a 5½″ × 2½″ Flexible Plate edged by 5½″ Strips, and it is attached to the sides by Angle Brackets.

A 5½″ × 2½″ and a 2½″ × 2½″ Flexible Plate 10 and 11 are bolted to each Angle Girder 1 and 2, and to the uppermost edge, a 5½″ and a 2½″ Strip and three 3½″ × 2½″ Flanged Plates are attached. Angle Brackets are placed at each end of the compound strip; two are bolted to the 5½″ × 2½″ Flanged Plate and the other two to the 5½″ Angle Girders 12. The fronts of the rear mudguards are each formed by bolting a 2½″ Strip 13 (Fig. 1) and a 2½″ compound strip 14 to the Flanged Plate.

The Cab

Attach a 3½″ × 2½″ Flanged Plate 15 to the front ends of the Angle Girders 1 and 2 with Angle Brackets. The bumper 16 is spaced away from the Plate by four Washers on each ⅜″ Bolt. Two 2½″ × 2½″ Curved Plates 17 are secured to the Flanged Plate 15. Semi-Circular Plates 18 are fastened by Angle Brackets to the Flanged Plate 15 and the Curved Plates 17. Two 3½″ Strips 19 join the Semi-Circular Plates together, and are extended by two 2½″ × 1½″ Flexible Plates 20, placed between a 4½″ Strip and a 4½″ × ½″ Double Angle Strip 21 that is secured to the 3½″ Strip by Obtuse Angle Brackets.

The radiator grille is represented by three 3″ Formed Slotted Strips, attached by ⅜″ Bolts. The centre one has a 4½″ Strip behind it to support 1″ Pulley Wheels mounted on ⅜″ Bolts that form the headlamps. To the Angle Girder 12, bolt two 2½″ Strips 22 and 23 and a 5½″ Strip 24. The Strip 24 is bolted at its front end to the Double Angle Strip 21 and a 2½″ Strip 25, which in turn is connected to the 2½″ Strip 23 by a 2½″ Strip. A 5½″ Strip 26 is bolted to the Strips 23, 24 and 22. The 3½″ × 1½″ Triangular Flexible Plate is attached to the Strip 24 by the bolt 27. Two 2½″ × 2½″ Flexible Plates are bolted to the Angle Girder 12 and the Strip 26, to represent the cab door.

With Angle Brackets attach two 2½″ × ½″ Double Angle Strips 28 (Fig. 2), set at right-angles to each other, to the Strip 26. Bolt a 4½″ Strip 29 to the Double Angle Strip and the Semi-Circular Plate, and secure two 2½″ × 1½″ Triangular Flexible Plates to this Strip with Angle Brackets. Two 2½″ Stepped Curved Strips finish off the mudguards, which are fastened to the chassis by 1″ × ½″ Angle Brackets bolted to the Double Angle Strips 28.

Two 4½″ × 2½″ Flexible Plates form the cab roof, and are fixed in place by Angle Brackets. The rear of the cab is filled in by a 4½″ × 2½″ and two 2½″ × 1½″ Flexible Plates, strengthened by two 3½″ Strips and a 4½″ Strip. The ladder cradle consists of two Flat Trunnions bolted to the 3½″ Strip. Two Reversed Angle Brackets are bolted to the Trunnions and to the other lugs of these a 3½″ Strip is attached. Fishplates are bolted to each end of this Strip.

Bolt two 4½″ compound strips 31 and 32 (Fig. 3) to the 2½″ × ½″ Double Angle Strips 33 fastened to the Angle Girders by the Bolts 34. Fixed to the Strip 32 are two Trunnions. A 3½″ Strip 35 is bolted to the Angle Girders 1 and 2 and supports a Flat Trunnion 36. Secure two Double Brackets 37, to the Angle Girders 1 and 2, and fix in each of them a Coupling carrying a 1½″ Rod 38 and a Crank. The Cranks are connected together by means of a 4½″ Strip 40 lock-nutted to them at each end. A 4½″ Rod 41 is placed through a 1½″ × ½″ Double Angle Strip attached to the Double Angle Strip 21 (Fig. 2), and the Flat Trunnion 36 (Fig. 3), with a Bush

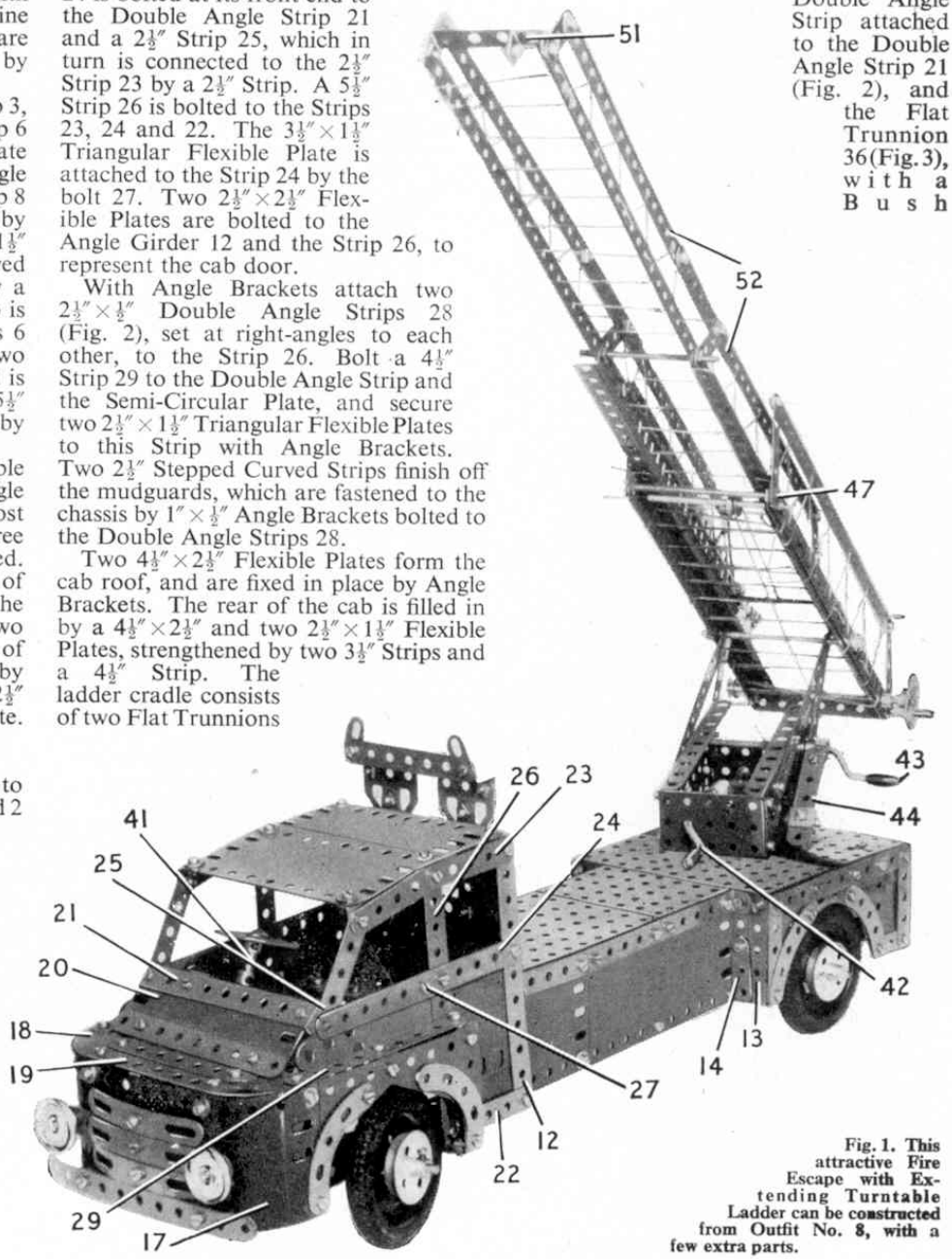

Fig. 1. This attractive Fire Escape with Extending Turntable Ladder can be constructed from Outfit No. 8, with a few extra parts.

Wheel and a Steering Wheel secured to its ends. Bolt a $2\frac{1}{2}''$ Strip extended by a $2''$ Formed Slotted Strip to the Bush Wheel. A bolt in the slot of the Slotted Strip is fastened to the Strip 40 with two nuts. Place $2''$ Pulleys with Tyres, loosely on the Rods 38, using $1\frac{1}{8}''$ Flanged Wheels to retain them in position. The rear wheels are secured on a $5''$ Rod placed in the Angle Girders 1 and 2.

The Turntable

A $3''$ Pulley Wheel bolted to the $5\frac{1}{2}'' \times 2\frac{1}{2}''$ Flanged Plates, holds a $2''$ Rod in its boss. Two Flanged Sector Plates connected together at each end by $2\frac{1}{2}'' \times 1\frac{1}{2}''$ Flanged Plates, are bolted to another $3''$ Pulley. This unit is then placed on the $2''$ Rod, using a Collar to hold it in place. A $\frac{1}{2}''$ Pinion is secured at the end of the $2''$ Rod. A Worm Wheel on the Crank Handle 42 is arranged to engage with the $\frac{1}{2}''$ Pinion. Bolt a $3''$ and a $5\frac{1}{2}''$ Strip to the sides of the Flanged Sector Plates and place another Crank Handle 43, with a $\frac{1}{2}''$ Pinion attached to it, in the Sector Plates. A $2\frac{1}{2}''$ Strip 44 with an Obtuse Angle Bracket at one end, is bolted to a Double Bracket that is pivotally mounted on a $\frac{3}{4}''$ Bolt fixed in one of the Sector Plates as shown in Fig. 1. The Obtuse Angle Bracket contacts the $\frac{1}{2}''$ Pinion on Crank Handle 43 and forms a ratchet device to hold the ladder in position when raised.

The Escape Ladder

Two pairs of $12\frac{1}{2}''$ Angle Girders 45 are bolted together by their elongated holes leaving a gap between their other flanges as seen in Fig. 2. The two pairs of Girders are joined at the bottom with a $3\frac{1}{2}'' \times \frac{1}{2}''$ Double Angle Strip 46 and with a $3\frac{1}{2}''$ Screwed Rod 47 at the top. The $12\frac{1}{2}''$ Strips 48 are attached to the Angle Girders 45 with $2\frac{1}{2}'' \times \frac{1}{2}''$ Double Angle Strips 49.

Each side of the extending portion of the escape is built from a $12\frac{1}{2}''$ Angle Girder, extended by a $12\frac{1}{2}''$ Strip overlapped by four holes. The two sides are joined together by two $3''$ Screwed Rods 50, and by a $1\frac{1}{2}'' \times \frac{1}{2}''$ Double Angle Strip and a Double Bracket 51. Two $12\frac{1}{2}''$ Strips 52, overlapped seven holes, are attached to the Angle Girders and Strips of the ladder by $2\frac{1}{2}''$, $2''$ and $1\frac{1}{2}''$ Strips. On a $3\frac{1}{2}''$ Rod 53, place a $\frac{1}{2}''$ loose Pulley. Cord is taken from the $3''$ Rod 50, around the $\frac{1}{2}''$ loose Pulley and fastened to the $4''$ Rod 54. This Rod carries a Bush Wheel fitted with a Threaded Pin, and a $\frac{1}{2}''$ Pulley and a Collar are used to hold it in position.

Cord is fastened to the Double Angle Strip 46 and attached to the Crank Handle 43 and raises or lowers the ladder when the Crank Handle is turned.

Parts required to build the model Fire Escape: 8 of No. 1; 13 of No. 2; 6 of No. 2a; 6 of No. 3; 6 of No. 4; 18 of No. 5; 2 of No. 6; 6 of No. 6a; 10 of No. 8; 2 of No. 9; 2 of No. 10; 2 of No. 11; 19 of No. 12; 2 of No. 12b; 3 of No. 12c; 1 of No. 14; 2 of No. 15a; 1 of No. 15b; 1 of No. 16; 2 of No. 17; 2 of No. 18a;

(*Continued on page 148*)

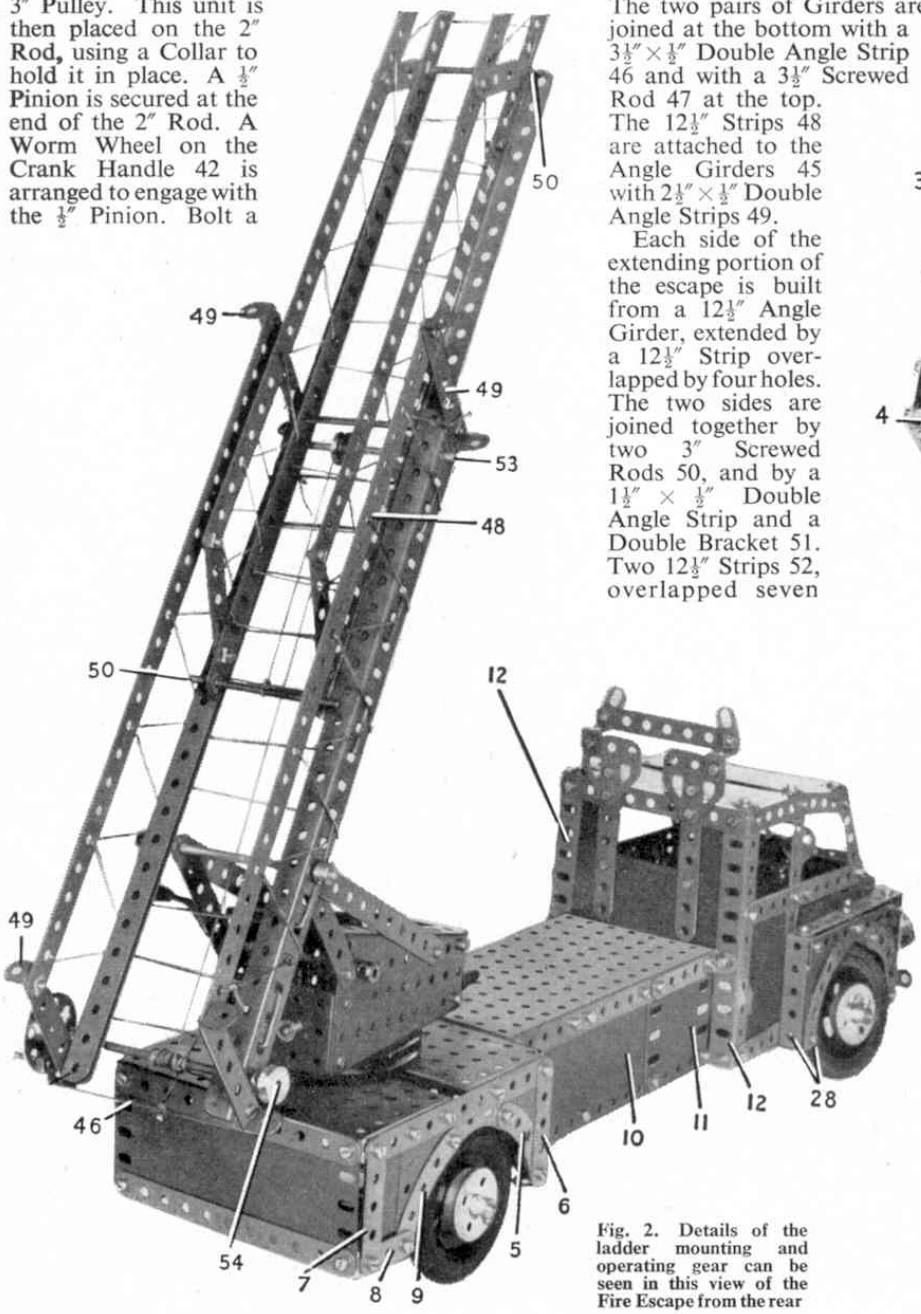

Fig. 2. Details of the ladder mounting and operating gear can be seen in this view of the Fire Escape from the rear

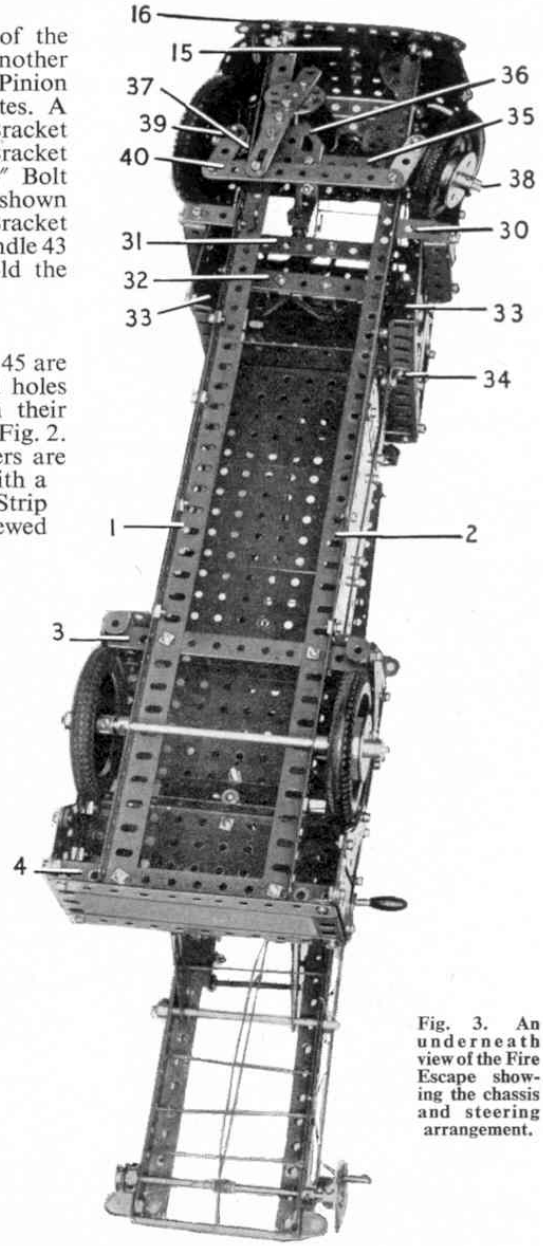

Fig. 3. An underneath view of the Fire Escape showing the chassis and steering arrangement.

A Tale of Ten Ships—

(*Continued from page 115*)

hunting group covering convoys.

After the fall of France she was ordered to keep a watch on the French fleet at Dakar. In July 1940 action was taken against the battleship *Richelieu* at Dakar. A motor boat from *Hermes* succeeded in getting through the boom and four depth charges were dropped under the battleship's stern with the object of damaging her propellers and steering gear.

Ocean Interceptor

This first-ever genuine British aircraft carrier came under the orders of the Commander-in-Chief, East Indies, in 1941 and did a great deal of valuable hunting, escorting and intercepting in the Indian Ocean. In 1942 she was ordered to sail from Trincomalee harbour, Ceylon, because of expected Japanese air attack. Unfortunately she was spotted by a Japanese reconnaissance plane and, attacked by some fifty aircraft, she was sunk off Batticaloa. Her commanding officer, Captain R. F. J. Onslow, eighteen other officers, and 268 ratings were lost.

And so to the tenth *Hermes*, a far cry—with her remarkable radar system, her angled flight deck, her fast, powerful striking force of Scimitar aircraft—from that sloop of 1796. Her motto *Altiora peto* (I seek higher things) is eloquent of her aim to serve even more illustriously than her nine predecessors.

The Pony Express—

(*Continued from page 117*)

It had helped to keep California in the Union by carrying Lincoln's first message to Congress to the west coast in seven days and seventeen hours. And its operations resulted in a loss of 200,000 dollars for its owners—a loss from which the company never recovered.

The Pony Express has become a legend of the Old West, but its true story is more remarkable than any fiction.

Air News—(*Continued from page 127*)

yo-yo to one of the landing skids of his Bell H–13 helicopter, waits until it has run down the rope and then makes a sudden vertical climb which starts the yo-yo climbing up again. By repeated, perfectly-timed changes of altitude, he keeps it running up and down the rope and manages to make the trick look as easy as playing with a normal-size yo-yo on the ground.

Fire Escape with Extending Ladder—

(*Continued from page 135*)

2 of No. 19b; 1 of No. 19g; 1 of No. 19h; 4 of No. 20; 4 of No. 20a; 2 of No. 22; 1 of No. 23; 1 of No. 23a; 2 of No. 24; 2 of No. 26; 1 of No. 32; 206 of No. 37a; 196 of No. 37b; 38 of No. 38; 2 of No. 48; 10 of No. 48a; 4 of No. 48b; 2 of No. 48c; 2 of No. 48d; 2 of No. 51; 2 of No. 52; 4 of No. 53; 2 of No. 54; 10 of No. 59; 2 of No. 62; 2 of No. 63; 1 of No. 80a; 2 of No. 80c; 4 of No. 90; 6 of No. 90a; 1 of No. 111; 5 of No. 111a; 6 of No. 111c; 1 of No. 115; 4 of No. 124; 4 of No. 125; 3 of No. 126; 3 of No. 126a; 4 of No. 142a; 1 of No. 185; 8 of No. 188; 6 of No. 190; 3 of No. 191; 3 of No. 192; 2 of No. 200; 2 of No. 214; 3 of No. 215; 8 of No. 221; 2 of No. 224.

Stamp Gossip—(*Continued from page 147*)

printed in Venezuela, is of interest, particularly if you know a bit of Spanish (good practice if you are learning). With the aid of a magnifying glass it is quite easy to read the part of a front page of the *Caracas Gazette* reproduced on the stamp, illustrated on page 147. You know, such stamps as these *really* are interesting, and what a pleasant way of learning history they provide.

INDIA

I have been reading in one of the stamp magazines that Indian stamps are not as popular as they were because of that country's stamp-issuing policy. I feel I should tell collectors of Indian stamps that in my view such a statement is nonsense, as not only are the issues of that great country very popular but, as I know at first hand, the vogue is increasing all the time. It *should* increase, for not only does the Indian Post Office issue really interesting stamps, but these stamps are always of low face value, are relatively few and far between, and are always available in quantities sufficient to prevent cornering (something which so often happens with the stamps of many countries). Thus, even the collector with the most modest purse can afford to buy all that are issued, and so Indian stamps are being increasingly collected.

Mr. Kooka, of Bombay, has kindly sent me a first day cover, with attractive postmarks, and the stamps belong to the issue made January 6 last. The portrait depicted is of Tyagara, the "Musician of the South". I am afraid I do not know much about the man who has been honoured by this stamp issue, but I understand he was also a very holy man. It will be noticed that the lettering is in English only, and I have read that this is the first stamp, under the present regime, on which Hindu has been omitted. This is not so, as there have been several stamps featuring only English wording. What I like about these Indian commemorative stamps is that they generally deal with important events in Indian life, and thus are stamps with a real purpose.

TIP OF THE MONTH

As most collectors know, Kenya recently brought out a new set up to £1 top value. Used stamps are becoming available, and can be picked up at well below face value. I do not think this issue will have a very long life, for political changes mean changes in stamps. Make sure now to get your set together, while the going is good.

Farewell to the Irish Narrow Gauge—

(*Continued from page 142*)

Although, by 1960, the West Clare was the sole survivor of the eighteen narrow gauge lines, it had a bad start in life. Underpowered engines made nonsense of the timetables, and the chaotic operating inspired Percy French to poke fun at, and immortalise, the West Clare's inefficiency in a music hall ballad. Better engines remedied the shortcomings, but the inimical motor-bus made inroads into the potential traffic in the 1930's. The line survived the war but by then rolling-stock and wheezing steam locomotives were alike vintage specimens and in no fit state to continue.

It seemed the end of the system was very near when, under Coras Iompair Eireann, the section was dieselised and rejuvenated. Railcars such as those on the Donegal road gave a good passenger service, and diesel-mechanical engines hauled the goods. But the reprieve was short-lived. With buses and lorries better able to move men and goods at a profit, and with rebuilt roads to carry them, the inevitable closure came. Within an old man's span of 90 years the Irish narrow gauge railways have come and gone.

ANSWER TO "JUDGE FOR YOURSELF"

The judge held that in stopping suddenly to avoid the dog, the bus driver had only done what any other reasonable driver would do. Mr. Smart should have realised, as should any passenger, that the bus might at any moment have to stop or speed up, and should have been holding on more firmly. So Mr. Smart lost his case.