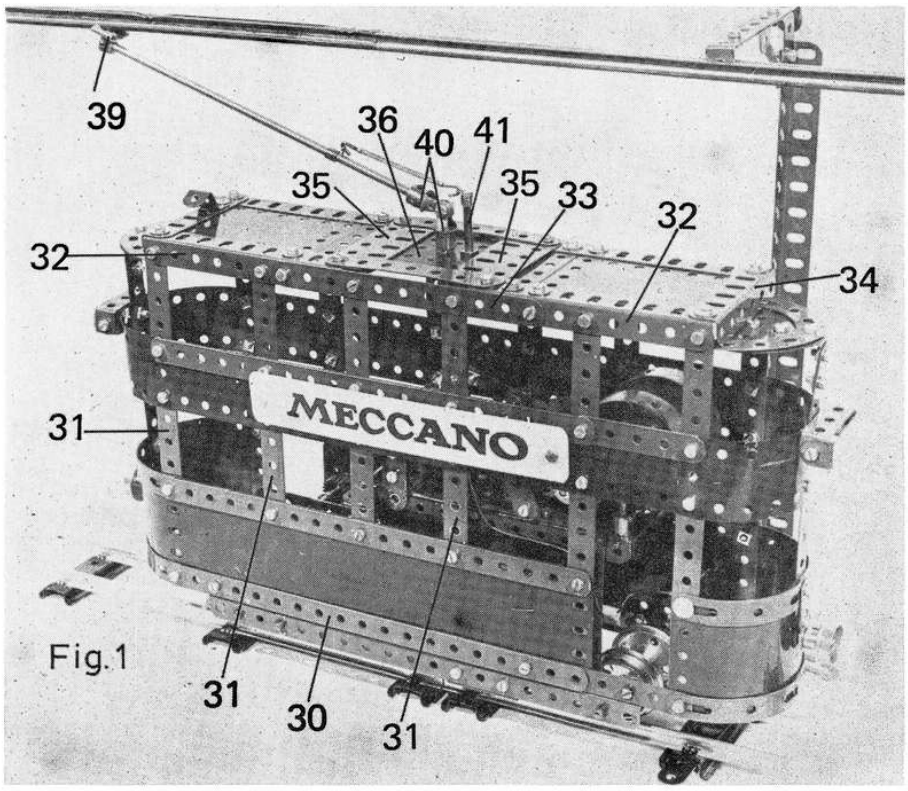

Fig.1

All Aboard the Ding-Ding Tramcar!

AN AUTOMATED MODEL BY JIM GAMBLE

AUTOMATION IS a common enough jingle these days and is more often than not associated with computers and electrical control circuits. However, mechanical programming can produce perfectly satisfactory results without over complication as was demonstrated by Jim Gamble's 'O' gauge Tramcar at a recent meeting of the Society of Advanced Meccano Constructors. Jim's model stole the show for sheer novelty, ease of construction and reliability. Not only does his tram run on standard tinplate 'O' gauge rails, picking up current from an overhead wire, but using a single electric motor, the tram runs a pre-determined circuit, gives a single bell warning before coming to rest and after a short pause the old familiar "ding-ding" sounds before the tram lurches forward again in characteristic manner.

Our thanks go to Bert Love for the following description of the tram as well as for all the accompanying photographs from which it will be seen that Jim has chosen a simple design of double deck car as his subject. The model has been deliberately left free of internal fittings to allow plenty of room for the 'heart' of the drive and bell mechanism. One important feature of the roof construction is that an electrical Insulating Flat Plate is required in the centre to support the Long Threaded Pin and lock-nutted End Bearing of the trolley pole to insulate this from the car body. Quick removal of the entire car body from the chassis is provided by four Bolts passing into four Threaded Bosses arranged at the chassis corners as can be seen in Fig. 2. Careful study of Figs. 2 and 3 is required, but construction is not difficult.

CONSTRUCTION

Starting with the main gearbox, a pair of 2½" x 2½" Flat Plates 1 are bolted to the flanges of a 2½" x 1½" Flanged Plate 2 (see Fig. 3.) to form the inner wall of the gearbox. Immediately above the Flanged Plate, a 2½" Double Angle Strip 3 is bolted inside the Flat Plates to form the first part of the support for the bell strike platform. Before tightening the Bolts on the Flanged Plate, a 3" Rod is run through its central slotted holes, making sure that the Rod runs freely. This Rod is fitted with a Worm 4 at one end and a ½" Pinion and Collar at the other, all components being inside the gearbox side plates. It may be found that Flanged Plate 2 is slightly shorter than the standard 2½" Double Angle Strip, in which case the Flanged Plate should be packed away from one side of the gearbox with a 1½" Strip.

A second 2½" Double Angle Strip 5 is bolted one hole in from the edge of the gearbox in line with the top edge of the small Flanged Plate, and this must be bolted up firmly to form a journal for the next gearbox shaft. A 2" Rod, fitted with a small Contrate Wheel 6 and a Washer is passed through the second hole of this Double Angle Strip. A Worm Gear 7 is added before the shaft is passed through Flanged Plate 2, and a 57t Gear 8 is fixed on the Rod outside the Plate. This should be tested for smooth running, then the ½" Pinion on the first gearbox shaft can be adjusted to mesh with the Worm.

Two more 2½" Double Angle Strips are required for the gearbox and one of these, 9, is seen bolted across the rear of the side plates, one hole up, in Fig. 3. It is most important to stand off the right-hand Bolt with Washers so that only the Nut thickness appears inside the gearbox to give clearance for a 57t Gear 10 on a 1½" Rod journalled in one Plate 1 and in the last Double Angle Strip 11 which runs from front to back of the gearbox, as shown. It is spaced by one Washer at the rear to line up the 1½" Rod correctly. The Rod is free to slide in its bearings.

Shaft number three – a 3" Rod – is evident in Fig. 3, where it runs across the gearbox one hole in and one hole down at the rear. It is shown carrying two ½" Pinions 12, but the left-hand Pinion may be omitted as it was originally intended

for an additional feature not now included. The Rod is held in place by two Collars, inside Plates 1. The right-hand Pinion meshes with Contrate Wheel 6 and Gear Wheel 10. This Gear Wheel is normally in mesh with the Pinion by virtue of a Compression Spring loading the 1½" Axle Rod to the left, an external Collar seen in Fig. 2 limiting the inward travel of this Rod.

The last gearbox shaft is a 3" Rod journalled in the rear Double Angle Strip and running forwards into Flanged Plate 2. It carries a Collar, a Cam 13, another Collar and then, on the outside of the Flanged Plate, a ½" Pinion. This completes the gearbox but adjustments will have to be made when the tram is ready for running.

CHASSIS

The chassis is a very simple construction, as shown in Fig. 2. Two 9½" Angle Girders 14 form the base and are bridged underneath by a 2½" x 1½" Flanged Plate mounted six holes back from the forward end. This Plate carries a Motor-with-Gearbox, as shown. A 3" Strip 15 adds bracing across the Girders just forward of the main gearbox and the gearbox itself is fixed by Angle Brackets to the slotted holes of the Girders. Note carefully that the gearbox is set over to the left, two Angle Brackets being used internally at the base of the left-hand gearbox plate and one Angle Bracket centrally outside the right-hand plate. If a ¾" Pinion is fitted to the motor shaft to mesh with external 57t Gear 8, adjustments can be made to ensure a smooth-running gearbox so far.

Flanged wheels are fitted onto 3½" Rods mounted in the chassis Girders and held with internal Collars. Spacing for the Flanged Wheels is set to 'O' gauge standard, the rear axle also carrying a 57t Gear 16 between the wheels. Drive to the rear axle is via a further 3½" Rod level with the rear axle and mounted in the chassis Girders just below the sliding 57t Gear 10 in the Gearbox. Two ½" Pinions are fitted to this shaft, one of which meshes with the Gear 16 on the rear axle and the other with Gear 10 above. The gearbox is set in the 6:1 ratio and the tram so far built should now be tried on a short run, to test the transmission. Shaft alignment and bearings should be checked for smooth running.

BELL PLATFORM

All construction for the bell platform is carried out on a 5½" x 2½" Flanged Plate 17, one end of which is fitted with a 2½" Girder for attachment to the gearbox. One left-hand and one right-hand Flanged Bracket 18 (Part Nos. 139 and 139a) are bolted to the Plate, as shown, and are bridged with a 2½" x 1" Double Angle Strip, locked in place by a 1½" Strip 19 at each side, on to the Flanged Brackets. The Double Angle Strip forms a check bar for the bell strikers which consist of 3½" Narrow Strips 20, spaced on a 3" Rod with Collars and Washers, as is clearly shown in Fig. 2. The Rod is journalled in the top holes of the two Flanged Brackets. Each Narrow Strip is fitted with a ½" brass Pulley 21 by means of 3/8" Bolts and lock-nuts to form bell hammers, the opposite end of each Narrow Strip being fitted with a standard Bolt and Nut.

Return 'springs' for each striker are provided by 2½" Driving Bands looped through the Narrow Strips, as shown, and passed through the holes in the Flanged Plate immediately below, where they are trapped by a 2½" Rod fitted with Collars at each end. Two Boiler Ends are used for bells and these are fitted with a lock-nutted 3/8" Bolt which is then fitted tightly into a Threaded Coupling. This, in turn, is mounted on a 2" Rod held in a Rod Socket at the corners of the Flanged Plate. Set the bells at a suitable height and try flicking the strikers. Adjust the bell height until a clean, sharp "ding" is obtained.

CAM SHAFT ASSEMBLY

Careful construction and adjustment is required of the cam shaft assembly as it is the heart of the entire 'programming' of the Tram's mechanisms. A 2½" x 1½" Double

Fig. 1 (opposite page): a general view of Jim Gamble's self-programming Tramcar. Note the overhead 'live' rail. Fig. 2 below: the chassis with bell platform and cam shaft bell-strike mechanism. Fig. 3 right: the automatic gearbox.

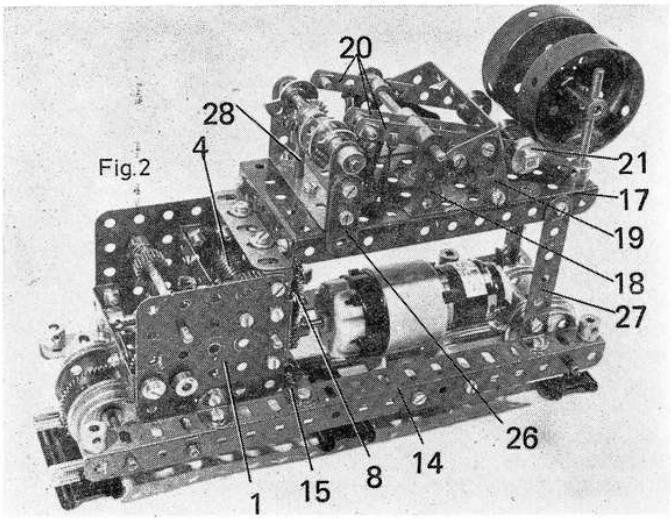

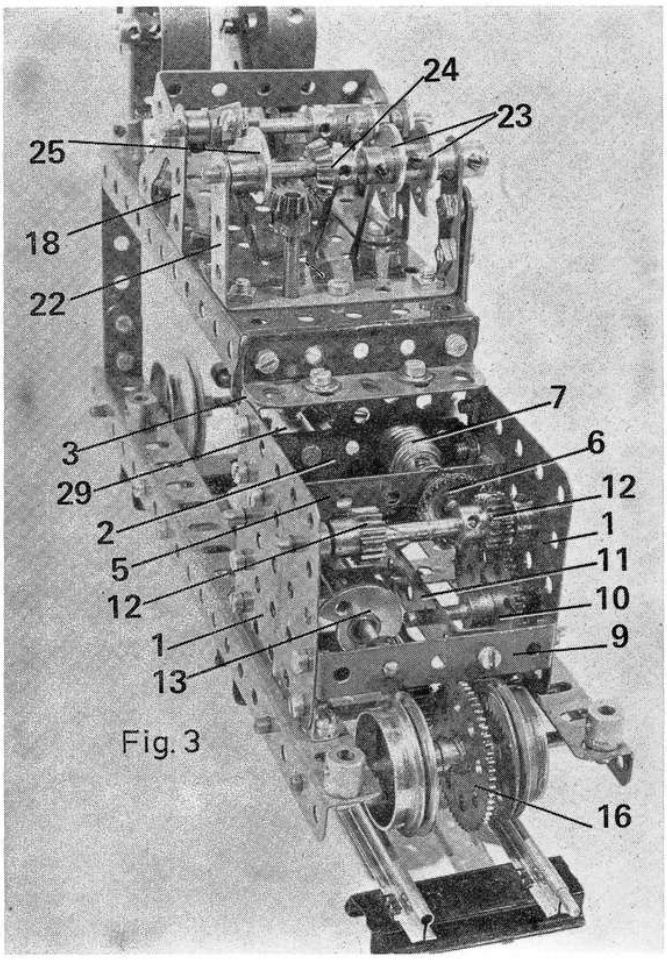

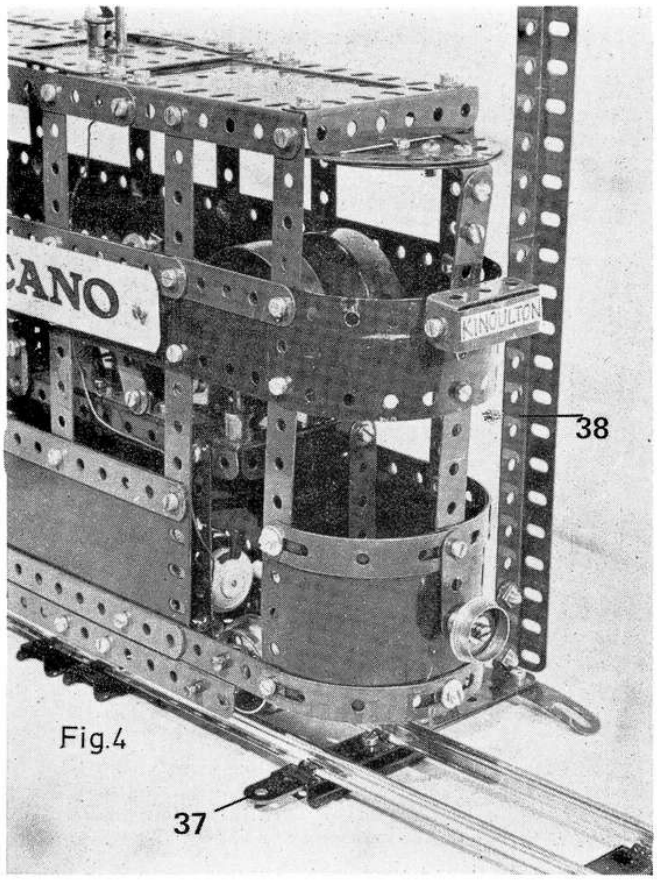

A close-up view of Jim Gamble's automated Tramcar showing front-end detail of the Tram, itself, and one of the supporting standards for the overhead power-feed rail. Although Jim's original model uses obsolete Hornby O-gauge track, readers may of course build their own track and overhead rail from Meccano parts, provided the track is insulated from the standards carrying the overhead rail. Construction of the Tram bodywork is clear from this illustration and the illustration on page 98

Angle Strip 22 is fixed to the bell platform one hole in from the rear end as seen in Fig. 2. The second hole from the left must give clearance for a 2½" Rod which will carry the bevel drive to the cam shaft. Mounted in the top holes of the Double Angle Strip is a 3" Rod which carries two Collars at the right hand end to stabilise the shaft, two Cams 23, a small Bevel Gear 24 and a third Cam 25. The Cams should be set up in the positions shown in Figs. 2 and 3, and note that there is quite a 'stagger' between the setting of the first single Cam and the other pair. The two which are close together have only a slight stagger distance between them. It is the single Cam that gives the 'ding' for signalling the tram to stop and the twin Cams give the 'ding-ding' for signalling the tram to move on again. Note that two thicknesses of 1½" Strips 26 are bolted to the right-hand end of the Double Angle Strip to bear against the edge of the bell platforms. This is to prevent side thrust from the Bevel drive causing the Double Angle Strip to bend sideways and disengage the Bevels.

At this stage the bell platform is mounted on the gearbox, but, as it is offset, like the gearbox, to the left, it is supported at the front end of the chassis by a side leg (a 3" Strip 27) at the right and by an end leg at the left. This arrangement is clearly shown in the illustrations.

Fig. 3 shows the fourth Cam 13 in the gear train mounted in the bottom of the gearbox and its job is to push the short sliding 1½" Rod to its right and hence to disengage Gear Wheel 10 from the driving mechanism to halt the tram for a short period. The far end of this 3" Cam Shaft carries a ¾" Pinion outside the gearbox to mesh with a small Contrate Wheel carrying the drive upwards to the small Bevel on the upper cam shaft. The lower bearing for the vertical Bevel-carrying shaft 28. is a Threaded Coupling 29 (see Fig. 3.) bolted to the outside of Flanged Plate 2. This must be adjusted carefully in conjunction with the 2½" Angle Girder on the top of the gearbox to give an absolutely free-running journal for the vertical shaft passing up through the bell platform. Note that the two small Bevels are in unorthodox mesh, not being designed to mesh together at 90°. However, they work perfectly satisfactorily at the low speed of the cam shaft and they give the necessary clearance for the sweep of the left-hand Cam. Collars and Washers are used to locate the vertical shaft.

BODYWORK

To a large extent, the construction of the bodywork is clear from Figs. 1 and 4, therefore there is no need for step-by-step instructions here. Suffice it to say that a lower supporting 'ring' is built up from two 11½" compound strips 30, one at each side, connected at front and back by two Formed Slotted Strips to provide the rounded contours of the ends. Each compound strip is supplied by one 9½" and one 5½" Strip overlapped seven holes. Bolted to the 'ring', in the positions shown, are a number of vertical 7½" Strips 31 to which an appropriate supply of Flexible, Strip and Transparent Plates, Formed Slotted Strips and ordinary Strips are secured to supply the necessary panelling and windows. These are all evident in Fig. 1.

The roof edging at each side is supplied by two 4½" Angle Girders 32, separated by a distance of four holes, but connected by a 5½" Strip 33. The outer ends of the Girders at each side are themselves joined by a 3½" Angle Girder 34, while bolted between the inner ends of the Angle Girders at each side are two 3" Flat Girders 35. The roof is then enclosed by Flexible Plates, except for the centre section which is enclosed by a 2½" x 2½" Insulating Flat Plate 36, tightly sandwiched between Flat Girders 35 and the inner edges of the above-mentioned Flexible Plates. Accouttements, such as route indicators and headlamps, and the general finishing-off requirements are clear from the photographs.

TRACK AND POWER ARRANGEMENTS

Clockwork 'O' gauge railway track may be used for this model and, so long as sharp-radius curves are avoided, standard Meccano Flanged Wheels will be adequate. Readers will note that an early pattern of Flanged and Grooved Wheels are used in Jim's model. This was to allow it to run on an oval track of Hornby 'O' gauge rails with 2ft. radius curves. If difficutly is found in getting the tram to take curves using standard Flanged Wheels, the wheel base should be shortened (possibly by using small Flanged Wheels at the front) or the forward end of the chassis should be modified to allow the front axle to pivot.

Fig. 4 shows the insulated connection from the rails to the standard carrying the overhead rail. A 5½" Insulating Strip 37 is bolted to the rail 'sleeper' and is reinforced externally by a Flanged Bracket (Part No. 139 and 139a) bolted to the end of a vertical 12½" Girder 38, but raised by a Formed Slotted Strip to give ground clearance and support. Single

Continued on page

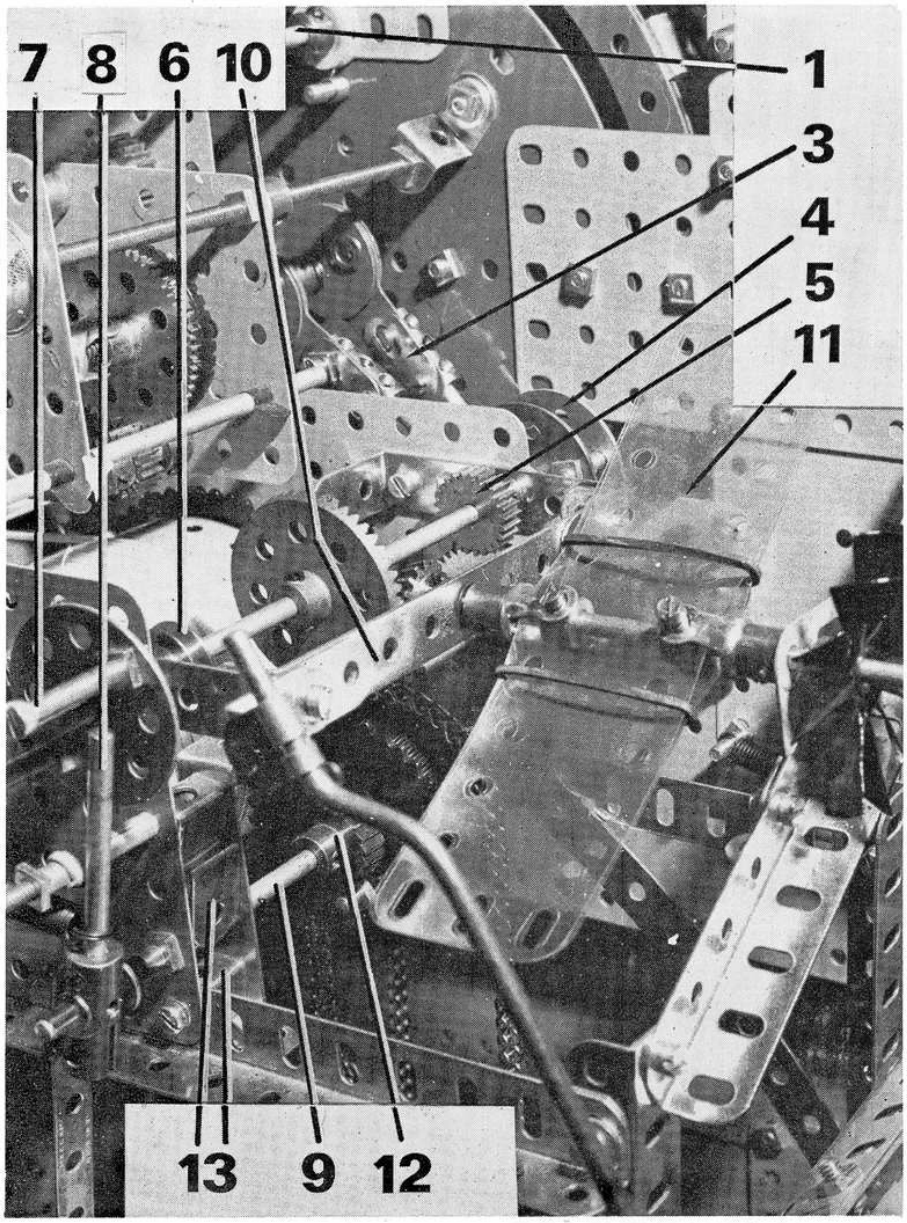

Close-up view of the strike mechanism fitted to the Grandfather Clock which appeared in the October 1973 issue of the Meccano Magazine Quarterly.

clock!). To clarify the photograph and, incidentally, to reduce the bearing friction on the seconds hand shaft 1, the front upper clock plate has been stepped over three holes to the left (as viewed from the rear of the clock.)

Each small Eccentric is fitted with a Coupling which carries a 2" Rod and the Couplings and Rods are fixed by Shoulder Bolts or lock-nutted using Fishplates 3 to take up some of the slack. Just to the left of Pinion 5 a Bolt can be seen and this passes through the Double Angle Strip and front clock plate to hold a Threaded Boss in place. Into this Boss a 1-1/8" Bolt is screwed tightly to act as a slide bearing for the two 'pump' rods.

It will be noted that the Eccentrics are mounted on the minute shaft at a displacement of 180° and it is this setting which must be adjusted to permit the clock to make its single strike exactly on the hour and the half hour. The inner Eccentric releases the Bush Wheel Pin seen at 4, allowing the strike shaft to rotate through 180° before the Threaded Pin on the outer Bush Wheel is trapped by the other Eccentric Rod, and so on, alternate release and trap operating at each half hour period. The position of the Strike Wheel pins 7 must be set just right by adjusting the 8-hole Bush Wheel's Grub Screw so that a clean strike is obtained, the Boiler weights being adjusted at the same time. Free-running bearings and a minimum weight in the Boiler is the secret. Properly set up, the strike mechanism will match the clock run on a single wind.

DING-DING TRAMCAR

Continued from page 100

lengths of rail taken from old tinplate track form the overhead rail as seen in Fig. 1 and these are held by their own pinching action on the lug of Double Angle Strips bolted to further Flanged Brackets at the top of the Girders.

An 8" Rod forms the trolley arm, the 'slipper' which contacts the overhead rail being a Slide Piece 39. End Bearings 40 form a flexible joint and pivot for the lower end of the trolley arm, while a short length of Spring Cord fitted with hooks gives tension to the trolley arm as shown in Fig. 1. A Cord Anchoring Spring is fitted to the trolley arm and another to the tip of a Long Threaded Pin 41 secured in the Insulating Plate 36 on the tram roof. One wire to the Motor is joined to the Pivot Bolt in the centre of the tram roof and the other wire of the motor goes to a convenient point on the tram chassis.

MECHANICAL SEQUENCING

Once the necessary 12 volt D.C. power supply is connected to the rails and to the overhead conductor, the motor will run and it will run continuously, regardless of what the tram is doing at any particular time. Drive to the rear wheels is fairly direct and at a nice scale speed, but Worm Gears meshing with Pinions are providing a slow drive to the two cam shafts. In fact there are two Worm reduction stages to the lower cam shaft which runs at the same speed as, and hence in phase with, the upper cam shaft. This is important. As the tram moves along, the lower Cam begins to push the short shaft to its right in a sideways direction, very slowly, eventually moving Gear 10 out of mesh, causing the tram to stop.

Just before this happens, the single Cam on the upper shaft must be set to trigger its bell for the single 'ding'. While the tram is at rest, the gear train to the cam shaft continues running. After a short pause, the second set of upper Cams gives a 'ding-ding' signal and almost immediately after this, the lower Cam has reached a position where it allows Gear 10 to spring back suddenly into mesh, thus giving the characteristic forward lurch of the old trams and driving the tram round the track until the bell sequence starts once again. Simple, but very effective, very realistic and very entertaining!

PARTS REQUIRED

6- 1a	2-18a	6- 48	1-125
4- 1b	4-20	4- 48a	4-131
14- 2	2-20b	1- 50	1-139
4- 3	3-23b	2- 51	1-139a
3- 4	2-25	1- 52	2-162a
2- 5	4-26	1- 58	2-166
6- 6a	3-27d	2- 58b	2-176
2- 8a	2-29	18- 59	6-179
1- 9d	2-30a	3- 63c	3-186a
4-12	2-32	2- 72	6-189
3-12a	182-37a	4- 90a	2-192
1-14	168-37b	4-103e	2-196
1-16a	36-38	5-111a	2-214
7-16b	1-46	1-115	8-215
2-17	1-47	1-115a	3-235b
1 Motor-with-Gearbox		1-120b	1-511

TRAMWAY STANDARD

1-5	9-37a	1- 48a	1-215
1-8	9-37b	2-139	1-501

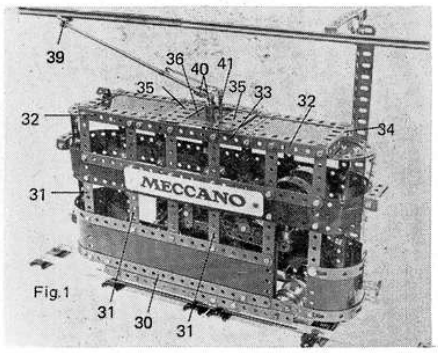

Fig. 1