A New Model for Outfit No. 7

Diesel Driven Motor Roller

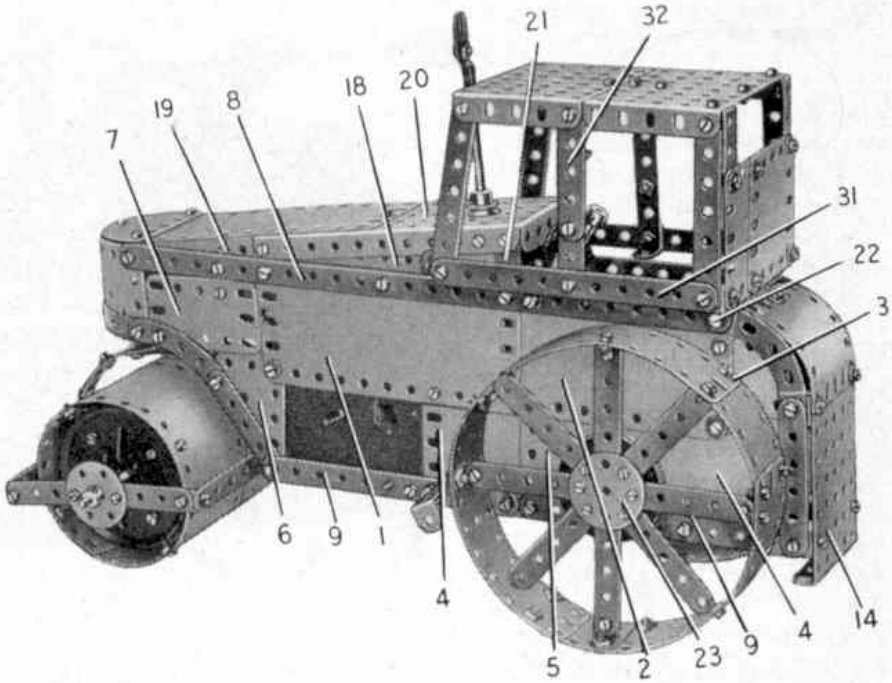

Fig. 1.
A Diesel Driven Motor Roller that can be built from Parts in Outfit No. 7.

Diesel Driven Motor Roller

The side of the model shown in Fig. 1 consists of a $5\frac{1}{2}'' \times 2\frac{1}{2}''$ Flexible Plate 1, a $4\frac{1}{2}'' \times 2\frac{1}{2}''$ Flexible Plate 2, a $2\frac{1}{2}'' \times 2\frac{1}{2}''$ Triangular Flexible Plate 3, two $2\frac{1}{2}'' \times 2\frac{1}{2}''$ Flexible Plates 4, one half of a Hinged Flat Plate 5, a $2\frac{1}{2}'' \times 1\frac{1}{2}''$ Triangular Flexible Plate 6 and a $2\frac{1}{2}'' \times 1\frac{1}{2}''$ Flexible Plate 7. The Plates are bolted to a $12\frac{1}{2}''$ Strip 8 and two $5\frac{1}{2}''$ Strips 9, and are edged at the rear by a 3″ Strip extended by a $2\frac{1}{2}''$ Stepped Curved Strip and at the front by a $2\frac{1}{2}''$ Strip and a $2\frac{1}{2}''$ Curved Strip. The Flexible Plate 7 is connected to the Strip 8 by a Flat Trunnion, and a No. 1 Clockwork Motor is bolted to the side as shown (see also Fig. 4).

The other side is similar to the one already described, except that the Plates 4 and 5 are replaced by a $5\frac{1}{2}'' \times 2\frac{1}{2}''$ Flanged Plate 10, a Semi-Circular Plate 3 is used in place of the Triangular Flexible Plate 3, and the space occupied by the Clockwork Motor is filled in by a $5\frac{1}{2}'' \times 2\frac{1}{2}''$ Flexible Plate.

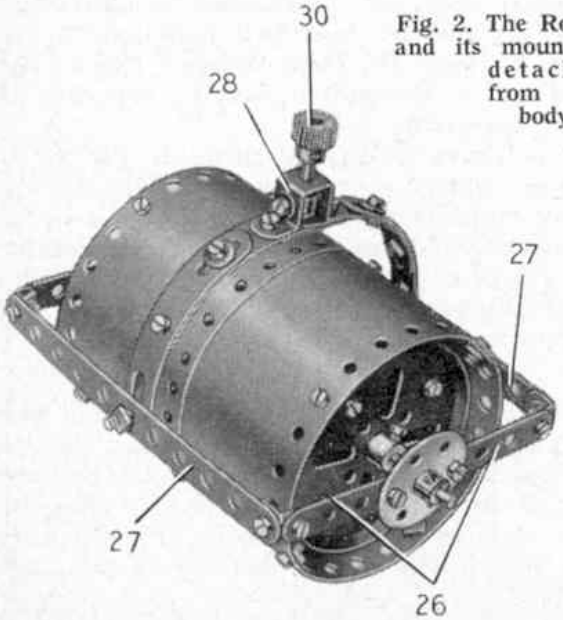

Fig. 2. The Roller and its mounting detached from the body.

The rounded front of the roller body is formed by a $2\frac{1}{2}'' \times 1\frac{1}{2}''$ Triangular Flexible Plate 12 and a $2\frac{1}{2}'' \times 2''$ Triangular Flexible Plate 13 on each side. These are arranged as shown in Fig. 3 and bolted to the ends of the Strips 8 and 11. Two Formed Slotted Strips are connected to the Plates 12 by a Fishplate, and attached to the front ends of the $2\frac{1}{2}''$ Curved Strips of the sides.

The sides are connected at the rear by two $2\frac{1}{2}'' \times \frac{1}{2}''$ Double Angle Strips, to which is bolted a $3\frac{1}{2}'' \times 2\frac{1}{2}''$ Flanged Plate 14. A $2\frac{1}{2}'' \times 1''$ Double Angle Strip 15, and two $2\frac{1}{2}'' \times \frac{1}{2}''$ Double Angle Strips 16 and 17 are bolted between the sides.

A Flanged Sector Plate 18 and a $5\frac{1}{2}''$ Strip 19 are fixed to each side as shown. A $5\frac{1}{2}'' \times 2\frac{1}{2}''$ Flanged Plate 20 is secured at the front to the Strips and the Flanged Sector Plates, and is supported at the rear by $5\frac{1}{2}''$ Strips 21 bolted to the sides. The Flanged Plate 20 is extended forward by a $5\frac{1}{2}'' \times 2\frac{1}{2}''$ Flexible Plate and a Semi-Circular Plate, which are connected to the ends of the Strips 8 and 11 by Angle Brackets.

A $1\frac{11}{16}''$ radius Curved Plate is bolted to the Flanged Plate 14 and is attached by a Fishplate to a $2\frac{1}{2}'' \times \frac{1}{2}''$ Double Angle Strip held by bolts 22.

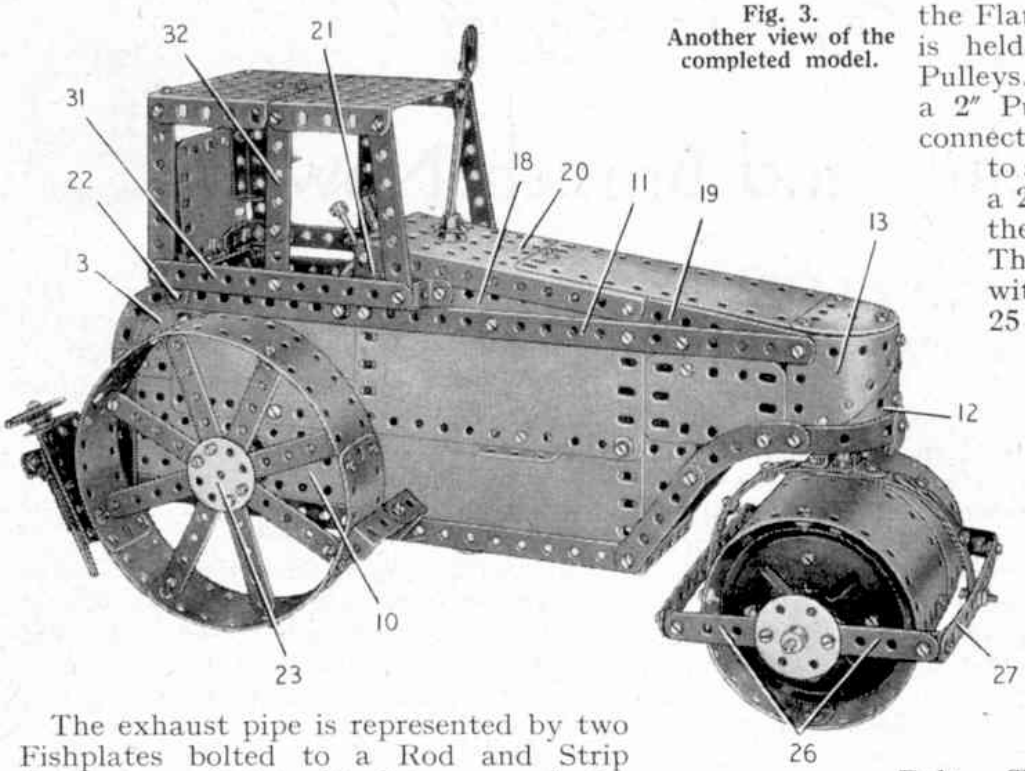

Fig. 3. Another view of the completed model.

The exhaust pipe is represented by two Fishplates bolted to a Rod and Strip Connector, which is fitted to one end of a $3\frac{1}{2}''$ Rod. The Rod is clamped by a $\frac{1}{2}''$ and a $1''$ Pulley in the Flanged Plate 20.

Rear Rollers and Driving Mechanism

Each of the rear rollers is made by bolting two $5\frac{1}{2}''$ Strips across the face of a Wheel Disc 23. These Strips clamp a further $5\frac{1}{2}''$ Strip centrally across the Wheel Disc, and two $2\frac{1}{2}''$ Strips are bolted in position to make a total of eight spokes in each roller. One of the $5\frac{1}{2}''$ Strips is attached by two $\frac{3}{8}''$ Bolts. In one of the rollers a $2''$ Pulley is placed over the $\frac{3}{8}''$ Bolts and is held in place by nuts, and in the other roller a Bush Wheel is similarly attached. The Bush Wheel and the $2''$ Pulley are used to fix the rollers to the rear axle.

The rim of each of the rear rollers is made from three curved $5\frac{1}{2}'' \times 1\frac{1}{2}''$ Flexible Plates and two curved $2\frac{1}{2}'' \times 1\frac{1}{2}''$ Flexible Plates.

The rear axle is a $5''$ Rod mounted in the centre hole of the half of the Hinged Flat Plate 5 and in a hole in the Flanged Plate 10, and is held in place by $1''$ Pulleys. The Rod carries a $2''$ Pulley 24, which is connected by a Cord belt to a $\frac{1}{2}''$ fixed Pulley on a $2''$ Rod mounted in the Motor side-plates. The $2''$ Rod is fitted with a 57-tooth Gear 25 which engages a $\frac{1}{2}''$ Pinion on the Motor driving shaft.

The Motor brake lever is extended by a Right-Angle Rod and Strip Connector fitted to one end of a $4''$ Rod and lock-nutted to the lever by a $\frac{3}{4}''$ Bolt. The Rod is passed through a hole in the Double Angle Strip 15 and a second Right-Angle Rod and Strip Connector is placed on it.

A Rod and Strip Connector is lock-nutted to the Motor reversing lever and to it is fitted a $4\frac{1}{2}''$ Rod. This Rod also passes through the Double Angle Strip 15 and it carries a Collar at its upper end.

The front roller (Fig. 2) is made by bolting across each of two $3''$ Pulleys a $3\frac{1}{2}'' \times \frac{1}{2}''$ Double Angle Strip and a $3\frac{1}{2}''$ Strip. Two $12\frac{1}{2}'' \times 2\frac{1}{2}''$ Strip Plates are curved and bolted together lengthways and attached to the lugs of the Double Angle Strips. The roller is mounted on a *(Continued on page 619)*

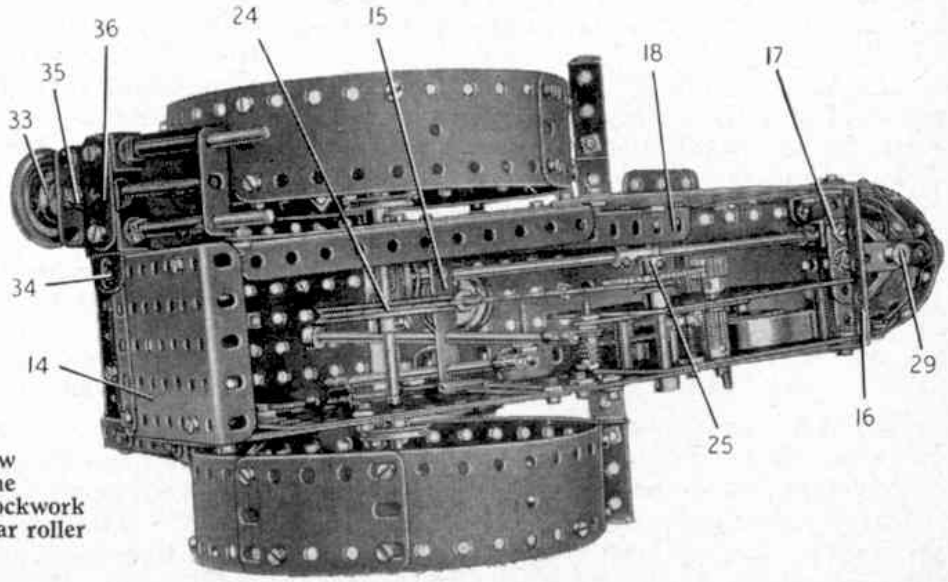

Fig. 4. This underneath view of the Motor Roller shows the location of the No. 1 Clockwork Motor and the drive to the rear roller axle.

Tipping Truck

Owners of Outfit No. 3 will be able to construct the interesting Tipping Truck seen in Fig. 3. The chassis of the model is a a 5½″ × 2½″ Flanged Plate to which two 4½″ Strips made up of four 2½″ Strips, angled as shown, are bolted and joined together by two 2½″ Double Angle Strips 1 and 2. These are connected by a further 2½″ Strip 3 through the centre hole of which a 3½″ Rod is journalled near one end and kept in place by a 1″ Pulley with Boss above the Strip and an eight-holed Bush Wheel 4, spaced by a ½″ Pulley without boss, below it. These parts should be assembled in such a way as to bring the Bush Wheel to the end of the Rod. Another 1″ Pulley is placed at the top end of the Rod to form the steering wheel. The upper half of the steering column is encased by two 2½″ × 2½″ and two 2½″ × 1½″ Flexible Plates attached to the chassis by a Reversed Angle Bracket 5 on each side.

Two Trunnions 6, to which are bolted 2½″ Strips, are bolted to the Bush Wheel 4 and these form the bearings for the front wheel axle, which is a 2″ Rod held in place by Spring Clips. The front wheel is a 2½″ Road Wheel.

Two Flat Trunnions form the bearings for the rear axle, which is a 3½″ Rod that carries two 1″ Pulleys with Tyres.

The front of the tipping bucket is a 2½″ × 2½″ Flexible Plate and each side is formed by a 2½″ × 2½″ Flexible Plate and a 2½″ × 1½″ Triangular Flexible Plate 7. They are attached to each other and to the floor by Angle Brackets at each corner, the floor being bent as shown to form also the back.

Two Double Brackets 8 are bolted to the floor of the bucket and these, together with two Fishplates held by bolts 9, form the bearings for a 3½″ Rod, which is held by Spring Clips. For travelling, the bucket is held by a lever formed from a 2½″ Strip 10 lock-nutted to the Flanged Plate. When the bucket is lowered to its normal travelling position the Strip 10 can be moved to engage with a Stepped Bent Strip 11 attached underneath the bucket.

A 3½″ Rod made up of a 2″ and 1½″ Rod joined by a Rod Connector is journalled in two Fishplates 12 and is held in place by Spring Clips.

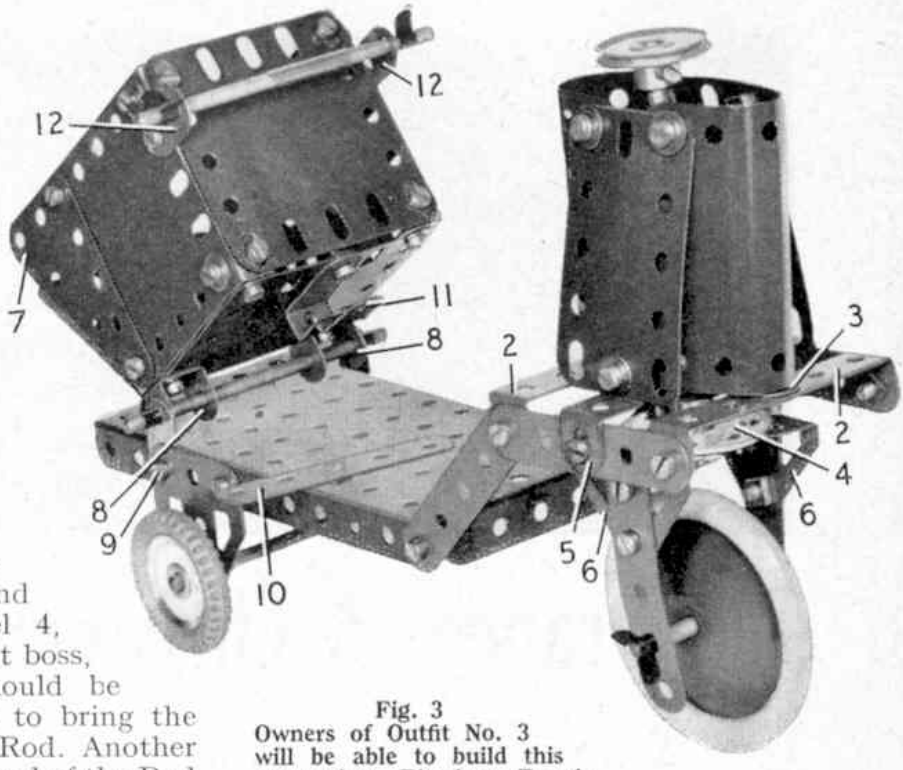

Fig. 3
Owners of Outfit No. 3 will be able to build this attractive Tipping Truck.

Parts required to build the Tipping Truck:- 8 of No. 5; 4 of No. 10; 2 of No. 11; 8 of No. 12; 3 of No. 16; 1 of No. 17; 1 of No. 18a; 4 of No. 22; 1 of No. 23; 1 of No. 24; 6 of No. 35; 47 of No. 37a; 46 of No. 37b; 10 of No. 38; 1 of No. 44; 2 of No. 48a; 1 of No. 52; 2 of No. 126; 2 of No. 126a; 2 of No. 142c; 1 of No. 187; 2 of No. 188; 21 of No. 190; 1 of No. 192; 1 of No. 213; 2 of No. 221.

Diesel Driven Motor Roller—(*Continued from page 631*)

6½″ Rod held by Collars in the centre holes of two six-hole Wheel Discs, each of which is fitted with two 2½″ Strips 26. The ends of the 2½″ Strips are connected by Angle Brackets to 5½″ Strips 27.

Four Formed Slotted Strips are bolted together as shown in Fig. 2 to form a half-circle, and this is lock-nutted at each end to the Strips 27. The join between the upper pair of Formed Slotted Strips is strengthened on the inside by a 1½″ Strip, and on the outside by a Double Bent Strip 28. A Collar is attached to the Double Bent Strip by two bolts, and in it is fixed a 1½″ Rod that is freely pivoted in a Crank 29 and a Flat Trunnion bolted to the Double Angle Strip 17. The Rod carries, above the Flat Trunnion, a ½″ Pinion 30 that meshes with a Worm on the steering column. The steering column consists of a 5″ and a 4½″ Rod joined by a Coupling. It is mounted in a Double Bracket fixed to the Double Angle Strip 17 and in a Flat Trunnion bolted to the rear flange of the Plate 20.

Each side of the driving cab consists of a 5½″ Strip 31, two 3½″ Strips and a built-up strip 32 made from a 2½″ Strip and a 2½″ × ½″ Double Angle Strip. The Strip 31 is connected at each end to the body by a ½″ Reversed Angle Bracket, and the roof, made from two 3½″ × 2½″ Flanged Plates, is attached to the upper ends of the 3½″ Strips and the strips 32. The Flanged Plates are joined together at the centre of the roof by a 1½″ Strip.

The back of the cab consists of two 2½″ × 2½″ Flexible Plates overlapped three holes. It is secured to two 2½″ × ½″ Double Angle Strips bolted to the roof and to two 1″ × 1″ Angle Brackets fixed to the sides of the cab.