Meccano Constructors Guide

by B. N. Love

Part II

Further Vehicle Mechanisms

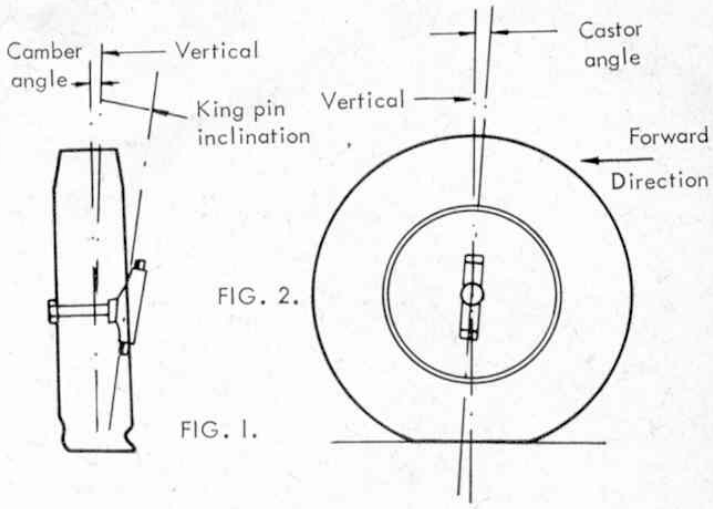

EFFICIENT STEERING ON MODERN high-speed vehicles demands careful attention to 'Steering Geometry' in the design stages to ensure minimum tyre wear, good road holding and cornering properties and the least driver fatigue. The parallel arm steering common to most vehicles has been demonstrated in Meccano parts on many occasions but the combination of those features required for accurate reproduction is not easily achieved with the standard parts at the disposal of the Constructor if he is to keep his models within reasonable scale size, viz a viz prototypes.

Fig. 1 shows what is known as Camber Angle on a front wheel in which the centre line vertically through the tyre is set at an angle to the King Pin. The first advantage of this is that the centre point of contact of the tyre section on the ground will coincide with the turning axis of the King Pin, or nearly so, which means that the wheel is steered, in the stationary position, almost on a single spot instead of through a wide arc which would produce steering 'drag' and driver fatigue. At the same time, tyre wear is reduced as the geometry involved reduces 'scrubbing' of the tyre tread.

Fig. 2 shows another important aspect of front wheel mounting known as Castor Angle. A glance at a four-wheeled porter's trolley on a railway station will quickly show that all four wheels are castored, i.e. fitted in forks with a pronounced trailing effect. This ensures that an initial push or pull on the trolley will align the wheel directions to that of the line of effort. The slight tilt to rear of the King Pin shown in Fig. 2 is sufficient to provide castor action in the steering geometry so that, after cornering, the car will tend to straighten up, the steerig wheel returning to central position without effort on the part of the driver.

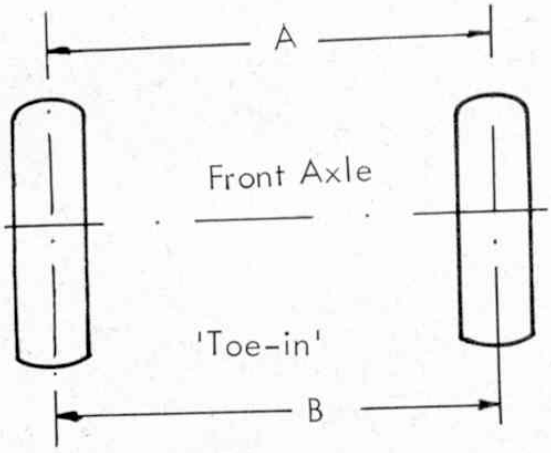

FIG. 3. Dimension A is less than B

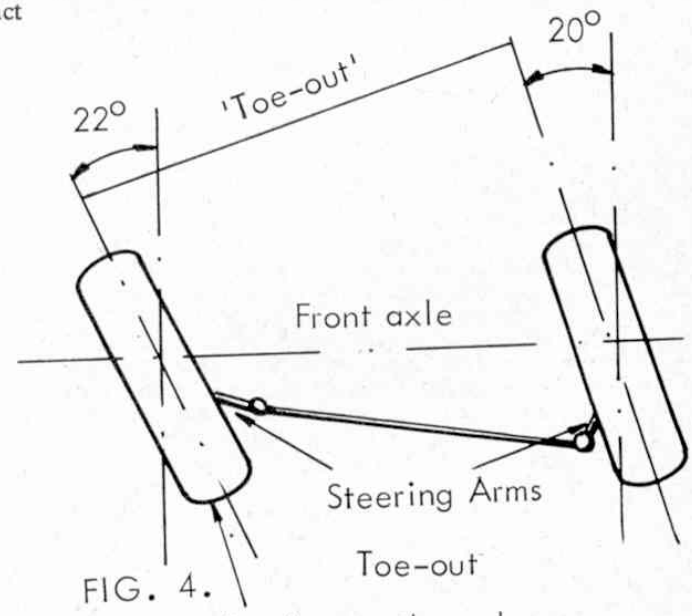

FIG. 4. Wheels turn through different angles when cornering.

Steering linkage comprising track-rod, steering arm, drag link and drop arm.

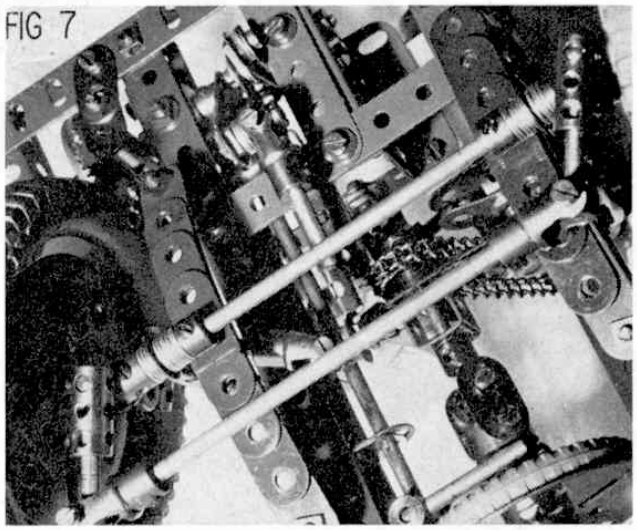

It is sometimes mistakenly thought that this self centring of the steering wheel is caused by splaying open the front wheels slightly to produce the same effect. On the contrary, in the stationary position, the front wheels of a vehicle have a very slight inclination towards each other rather than being splayed apart. This feature is known as 'toe-in' and, although such an adjustment is measured in fractions of an inch, it is sufficient to provide a counter against the tendency of the front wheels to splay apart under normal travelling conditions and thus prevents unwanted strains on the steering mechanisms and links.

It may be confusing at this stage to point out that once the steering wheel is turned, the front wheels will immediately start to 'toe-out'. Fig. 3 shows the 'toe-in' alignment and Fig. 4 shows the 'toe-out' condition when cornering. It will be noticed from Fig. 4 that the inside wheel, when cornering, is turned through a sharper angle than that of the outside wheel. The reason for this is that the front wheels of a car will complete two turning circles in a full turn, one circle being inside the other. Fig. 5 illustrates this and shows why the wheel describing the smaller circle requires a greater angle of turn. This is achieved by setting the steering arms of the front wheels at a pre-determined angle, as shown in Fig. 4.

Meccano steering hub capable of 'castor' angle adjustment.

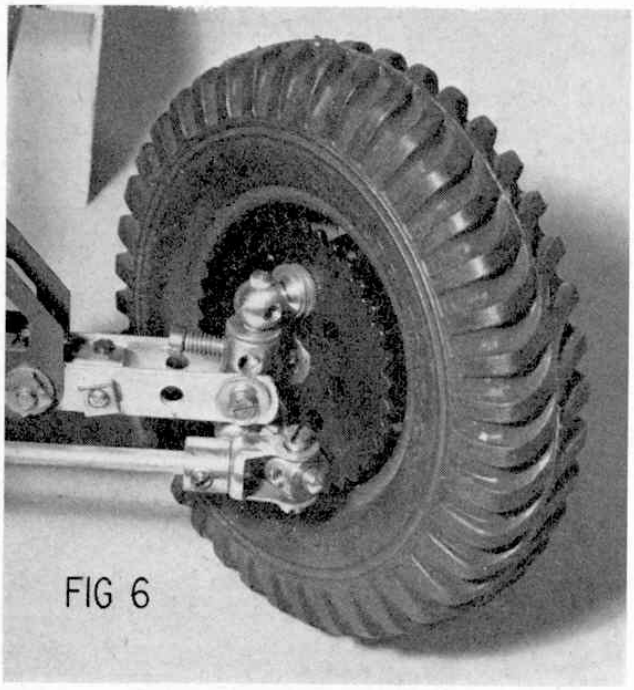

Fig. 6 shows a method of making a steering hub in Meccano parts. The hub flange is a 2 in. dia. Sprocket Wheel fitted with a pair of Handrail Supports. These carry a $1\frac{1}{2}$ in. Axle Rod to act as the King Pin which is journalled in a Short Coupling attached to the extreme end of the axle. By packing out the top Handrail Support with Electrical Brass Washers, camber angle can be achieved. The $1\frac{1}{2}$ in. Axle Rod must be free to pivot in the Short Coupling which is secured to double thickness Narrow Strips by Set Screws packed with a Washer to prevent the shank of the Set Screw from binding with the Axle Rod forming the King Pin. The lower Handrail Support is fitted with a short Threaded Pin in its tapped hole and the shank

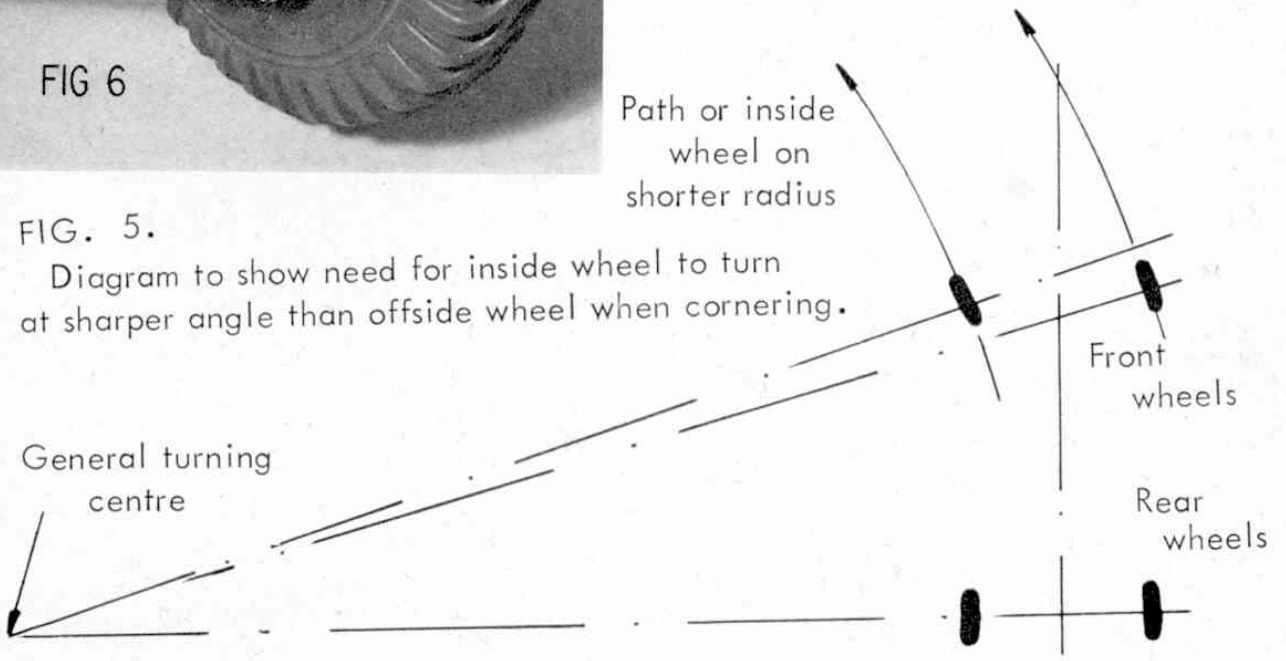

FIG. 5.
Diagram to show need for inside wheel to turn at sharper angle than offside wheel when cornering.

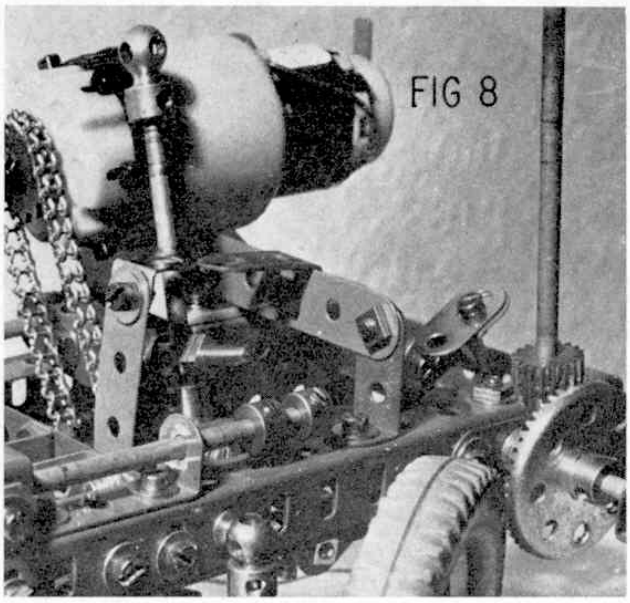

Forward-mounted steering column suitable for model buses, etc.

of the pin forms the steering arm to which the track rod is attached by a swivel Bearing. This arrangement gives a wide angle turning 'lock' and compact swivel joints. The angle of the Short Coupling forming the King Pin journal may be adjusted as follows: Fig. 6 shows a long-shank Bolt screwed into the upper tapped hole of the Coupling to indicate its alignment. By replacing this Bolt with a Screwed Rod and securing the inner end of the Rod near the axle centre by means of a Threaded Boss, Coupling, etc., a small degree of 'positive' or 'negative' tilt can be set on the King Pin and locked by nuts to a rigid setting. The spinning wheel hub carrying the tyre is simply a Boiler End fitted internally and/or externally with Bush Wheels to centre it, the tyre being a neat push fit on to the Boiler End.

A further system of track rod connection is shown in Fig. 7 where Couplings are employed at the lower end of the King Pins. These may be set at an appropriate angle for 'toe-out' (see Fig. 4) to give the correct turning geometry. In this arrangement, the steering arm linked to the steering column is carried at the top of the King Pin on the off-side of the chassis and runs between the elliptical springs and chassis member above. The steering arm is fitted with a drag link making use of Collars, Rod and Strip Connectors and Swivel Bearings to join up with a Crank acting as the drop arm from the steering gear. A further view of the steering column gearing is shown in Fig. 8 where it is seen mounted almost at the front of the chassis, typical of modern bus steering, the 19-teeth Pinion giving a reduction drive to the drop arm. The 19-teeth Pinion can be replaced by a 15-teeth or even a 13-teeth Pinion from the Meccano Clockwork Motor if a lower reduction is required between the steering column and the Contrate Wheel which operates the drop arm Crank.

Braking systems can be incorporated in Meccano vehicles by utilising Wheel Flanges or Boiler Ends as brake drums. Fig. 9 shows a simple internal expanding brake in which the bosses of two Cranks slide outwards in the slots of a Faceplate attached to the rear springs. A $2\frac{1}{2}$ in. Perforated Strip forms the brake lever and the Crank arms are pivotted on lock-nutted bolts attached to the brake lever in such a way that a forward movement of the brake lever drives the Crank bosses outwards to bind against the inside of the Wheel Flange. These bosses are sprung inwards for return motion by a short Rubber Driving Band linking them together.

More positive braking action can be achieved by making brake shoes from several thicknesses of Pawls without bosses, Part No. 147c. If these are locked on to a short Screwed Rod pivotting in the boss of a Threaded Crank attached to the wheel hub, a strong braking effect may be transmitted to the Pawls by an external lever. It is even possible to make fibre brake shoes by using $1\frac{1}{2}$ in. Insulating Perforated Strips bolted together or pivotted in stacks on Pivot Bolts inside the brake drums.

Simple brake cables may be formed from Loom Healds, Part No. 101, as shown in Fig. 9a and these are strong enough to provide considerable braking effort. A flexible brake cable can be made up from Meccano Spring Cord, Part No. 58, and for demonstration purposes, Electrical Tinned Copper Wire may be used running down the centre of the Spring Cord which would be anchored in Collars at either end of the brake line. Copper wire stretches quite easily how-

Simple internal expanding brake suitable for demonstration purposes.

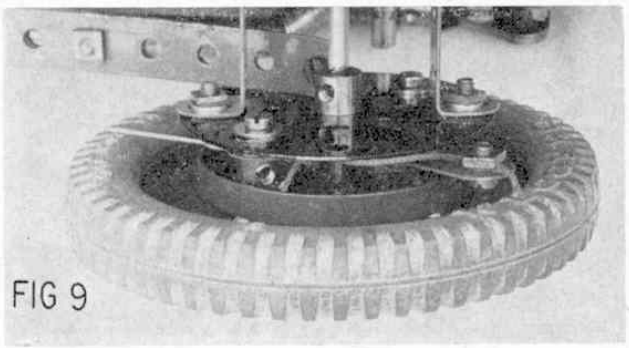

Hand brake lever suitable for operating vehicle brakes employing wire Loom Healds as brake cables. The Crank transmits identical braking effort to the far side of the chassis.

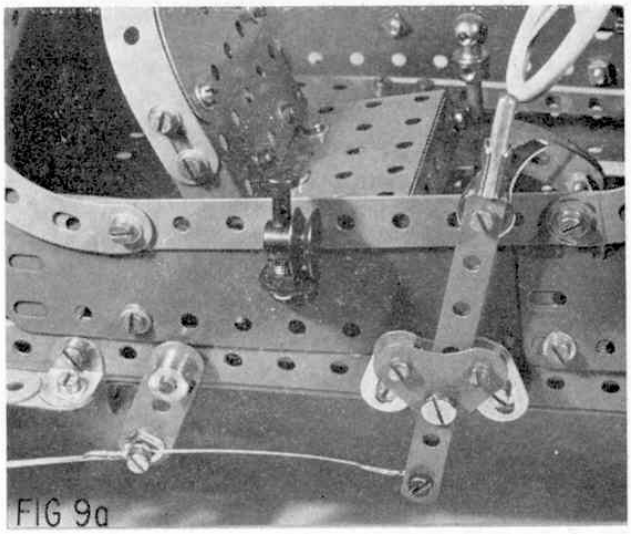

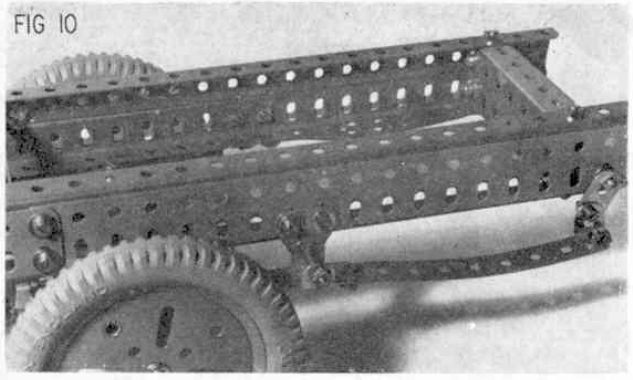

Lorry models should be provided with substantial chassis members as shown in the illustration.

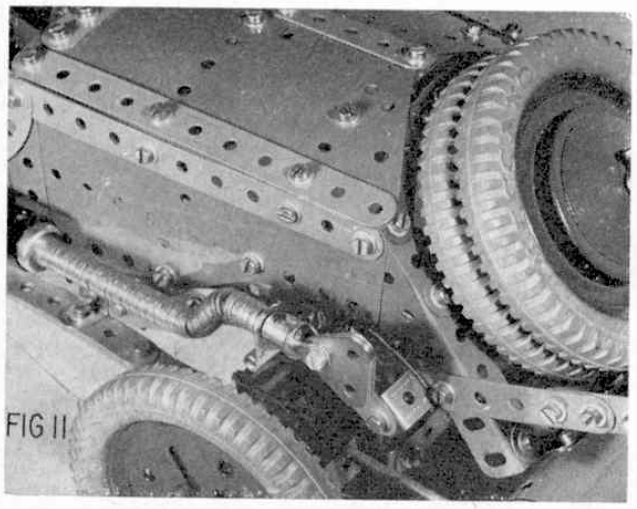

' Tail-end ' modelling of an early type sports car. Note twin spare wheels and tapered faring at rear of luggage boot.

ever and steel wire is preferable—that used in stringed instruments being ideal for the purpose.

Chassis construction for commercial vehicles should be rugged as in the prototypes and Fig. 10 shows one made up in channel girders with skeleton arrangement of leaf springs to indicate wheel spacing at the rear of a heavy duty lorry. Once the wheel arrangement is satisfactory, the leaf springs may be reinforced with additional Perforated Strips or built up from Narrow Strips to give a more pleasing scale.

If leaf springs are employed in Meccano models, they should be compatible with the size of the vehicle as far as possible and care should be taken to support the springs at their ends by well-designed shackles which will keep them aligned but will also permit them to bend under load. Our roads are well used by large vehicles and the observant constructor will note how the springs vary according to size and class of vehicle, many of the heavy commercial vehicles having their springs exposed below a fairly open structure of the chassis.

One type of popular spring which works well in Meccano vehicles is the cantilever spring. This is an ' upside down ' spring which has its forward end and its centre secured to the chassis and its trailing end is attached to the rear axle as shown in Fig. 11.

Considerable detail can be modelled into Meccano motor cars and lorries, by the careful selection and use of parts. Fig. 11 shows a neat construction of a heavy ' sporty ' type exhaust system using a large number of Washers on Axle Rods and Crank Handles, a ' fishtail ' being supplied by three 1 in. Triangular Plates locked in an End Bearing.

Figs. 12a and 12b show how fairings can be moulded from triangular and rectangular Flexible Plates and how a badge bar with large headlamps can set off a stylish radiator. Constructors who favour the Bentley/Bugatti/Aston Martin vintage models will appreciate the difficulties in modelling details. Fig. 12b shows an unorthodox use of Tension Springs in providing flexible feed-out pipes from the exhaust manifold to the main exhaust line. The E15R Motor used in the model shown has base flanges with slotted holes. The small twisted loops at the ends of standard Tension Springs, as supplied, lock into the slots with a simple twist and no other form of securing is required.

Next month's article will deal with Electrical Parts in the Meccano System and this will conclude the Constructors' Guide Series.

An example of ' vintage ' bodywork on a veteran chassis utilising Flexible Plates to model body contours and various parts in unorthodox applications.

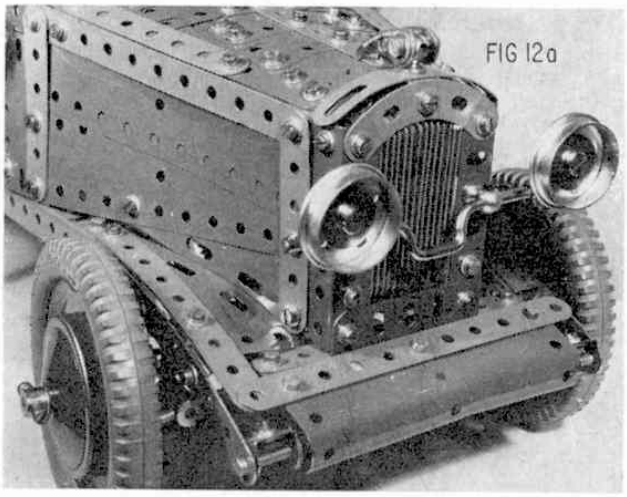
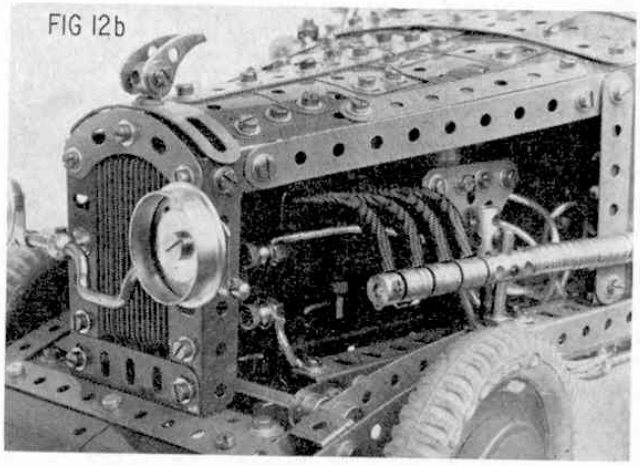
' Open-sided ' exhaust details making good use of Meccano Tension Springs in an unusual manner.