A WHIFF OF BY-GONE TIMES

Spanner describes two models that capture the lines of two classical sports cars, now almost extinct on today's roads

PERHAPS IT'S my imagination, but cars, these days, seem to be growing more and more alike. Different makes can sometimes quite easily be confused and even sports cars are beginning to look like saloon cars or vice versa. It hasn't always been like this, however. In times gone by, a saloon car was a saloon car and a sports job could not possibly be confused with it. I might add, incidentally, that the sports cars of the time really appeared far more "sporty" than their counterparts today although I do not of course suggest that they were any better as far as performance went.

It is easy to follow the changes in motor car design over the years by looking through old issues of *Meccano Magazine*. The car models featured there tend to mirror the real-life vehicles in use at the time of publication and you will see that this is so from the two models described here. Both are based on models found in past issues of the M.M. and I think you will agree that both are really distinctive in design.

The first is reminiscent of the famous Morgan three-wheeler, easily recognised by the twin-cylinder motor cycle engine mounted in front of the bonnet and open to the atmosphere. The model, however, draws its power from a Magic Motor.

Constuction is not difficult. Beginning as usual with the chassis, two $5\frac{1}{2}$ in. Strips 1 are joined by a $2\frac{1}{2} \times 1\frac{1}{2}$ in. Flanged Plate 2 and a $2\frac{1}{2} \times \frac{1}{2}$ in. Double Angle Strip 3. Note that the Flanged Plate projects a distance of one hole beyond the ends of the $5\frac{1}{2}$ in. Strips. A further two $5\frac{1}{2}$ in. Strips 4 are attached to Double Angle Strip 3 by Angle Brackets and to Strips 1 by Reversed Angle Brackets 5, then a $1\frac{1}{2} \times \frac{1}{2}$ in. Double Angle Strip 6 is bolted between Strips 4, as shown. Held by Spring Clips in the rear end holes of Strips 4 is a 2 in. Rod carrying a 1 in. Fixed Pulley 7 and a centrally-mounted $2\frac{1}{2}$ in. Road Wheel.

Now bolted to Flat Plate 2 is a $2\frac{1}{2}$ in. Strip 8 to the end of which a $3\frac{1}{2}$ in. Strip 9 is fixed at right angles. A Fishplate is lock-nutted to each end of this Strip, the securing Bolt also firmly fixing a Double Bracket 10 in place, then the Fishplates are further joined by a second $3\frac{1}{2}$ in. Strip 11, lock-nutted in place. Two Angle Brackets arranged in an open-ended "V" shape are fixed to the top of Strip 11 by Bolt 12. A $1\frac{1}{2}$ in. Rod is journalled in the lugs of each Double Bracket 10 to be held in place by a Spring Clip and a $2\frac{1}{2}$ in. Road Wheel.

At this stage, the Magic Motor can be fitted, being attached to Fishplates bolted to Strips 4. Bolted to the brake lever of the Motor is a $1 \times \frac{1}{2}$ in. Double Bracket in the lugs of which a 2 in. Rod extended by a Rod Connector 13, is held by Spring Clips. The Pulley on the Motor output shaft is connected to Pulley 7 by a Driving Band.

Turning to the body, each side is similarly built up from a $5\frac{1}{2} \times 1\frac{1}{2}$ in. Flexible Plate 14 and a $2\frac{1}{2} \times 1\frac{1}{2}$ in. Flexible Plate 15, is bolted to Strip 1, a distance of one hole separating the Plates. Another $5\frac{1}{2}$ in. Strip 16 is bolted between the upper edges of the Plates then Strips 16 at each side are connected by two $2\frac{1}{2} \times \frac{1}{2}$ in.

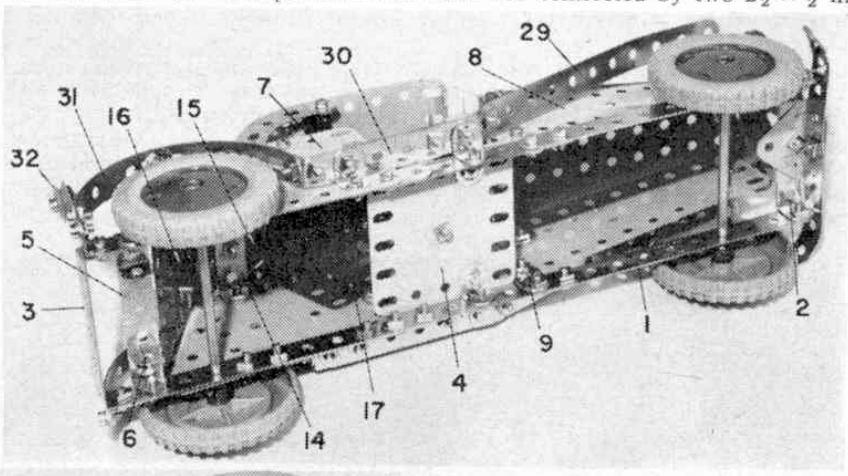

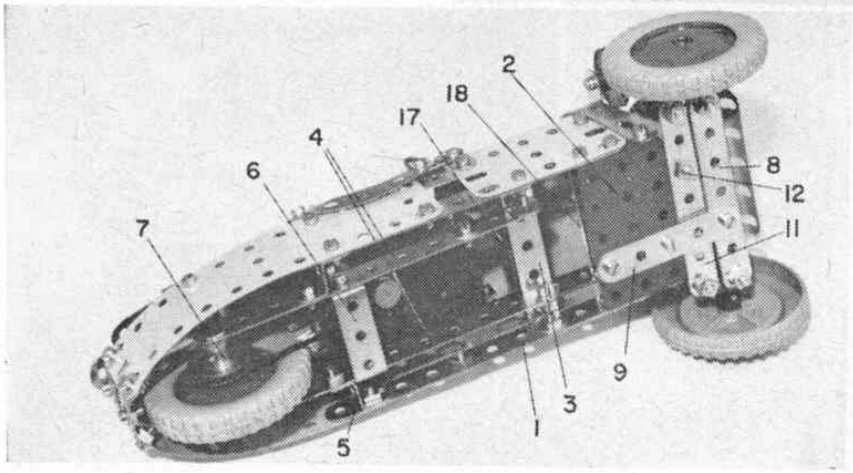

Above right: One of the most easily-recognisable sports cars of recent times was the Morgan three-wheeler, renowned for its "open-air" engine. This simple Meccano model, based on the Morgan, is powered by a Magic Clockwork Motor.

At right: For "sporty" looks, you can't beat the pre- and early post-war sports cars. This Meccano model is very reminiscent of such oldies.

Above: The simple but functional chassis of the model is clearly shown in this photograph.

At left: An underside view of the three-wheeler showing the layout of the chassis and steering gear.

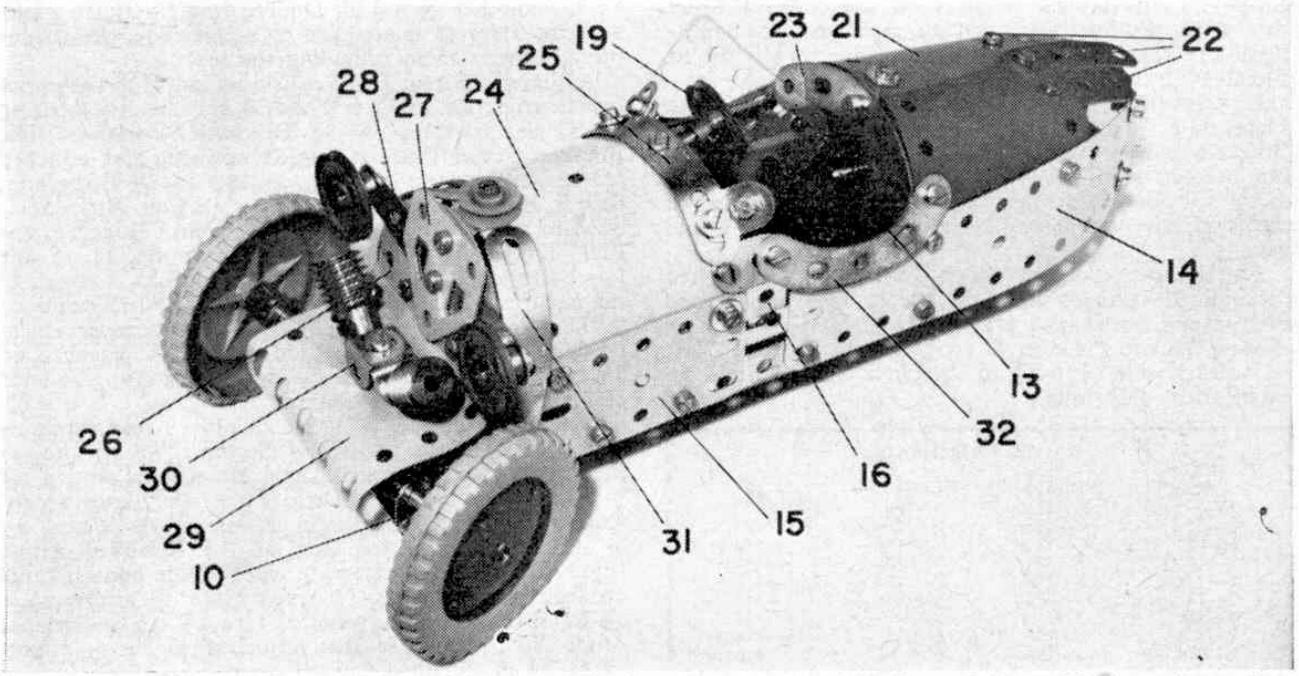

Double Angle Strips 17 and 18. A Fishplate is bolted through the second hole from the right of Double Angle Strip 17, the circular hole in the Fishplate, along with the corresponding hole in Double Angle Strip 18 providing the bearing for a $3\frac{1}{2}$ in. Crank Handle which acts as the steering column. The handle section of this Crank locates between the Angle Brackets held by Bolt 12, while a 1 in. Pulley 19 is fixed on the opposite end of the Crank Handle to serve as the steering wheel.

At the rear of the car, Plates 14 are joined by four Obtuse Angle Brackets 20 arranged in pairs, then the back is completed by a $4\frac{1}{2} \times 2\frac{1}{2}$ in. Plastic Plate 21 extended rearwards by three $2\frac{1}{2}$ in. Strips 22, positioned as shown. A $2\frac{1}{2}$ in. Stepped Curved Strip 23 is attached to the front edge of the Plate by an Angle Bracket.

The bonnet is represented by a $4\frac{1}{2} \times 2\frac{1}{2}$ in. Flexible Plate 24 to which a Formed Slotted Strip 25 is bolted, the end securing Bolts also fixing two Obtuse Angle Brackets in place. A $2\frac{1}{2} \times 1\frac{1}{2}$ in. Transparent Plastic Plate is attached to these Brackets to serve as the windscreen. Attached to the front of Plate 24 is a $\frac{1}{2}$ in. Pulley without boss, the securing Bolt also holding an Angle Bracket to which a Semi-circular Plate 26 and a Flat Trunnion 27 are bolted, the Trunnion being spaced from the Plate by a Washer. Bolted in place between the Trunnion and the Plate are two $2\frac{1}{2}$ in.

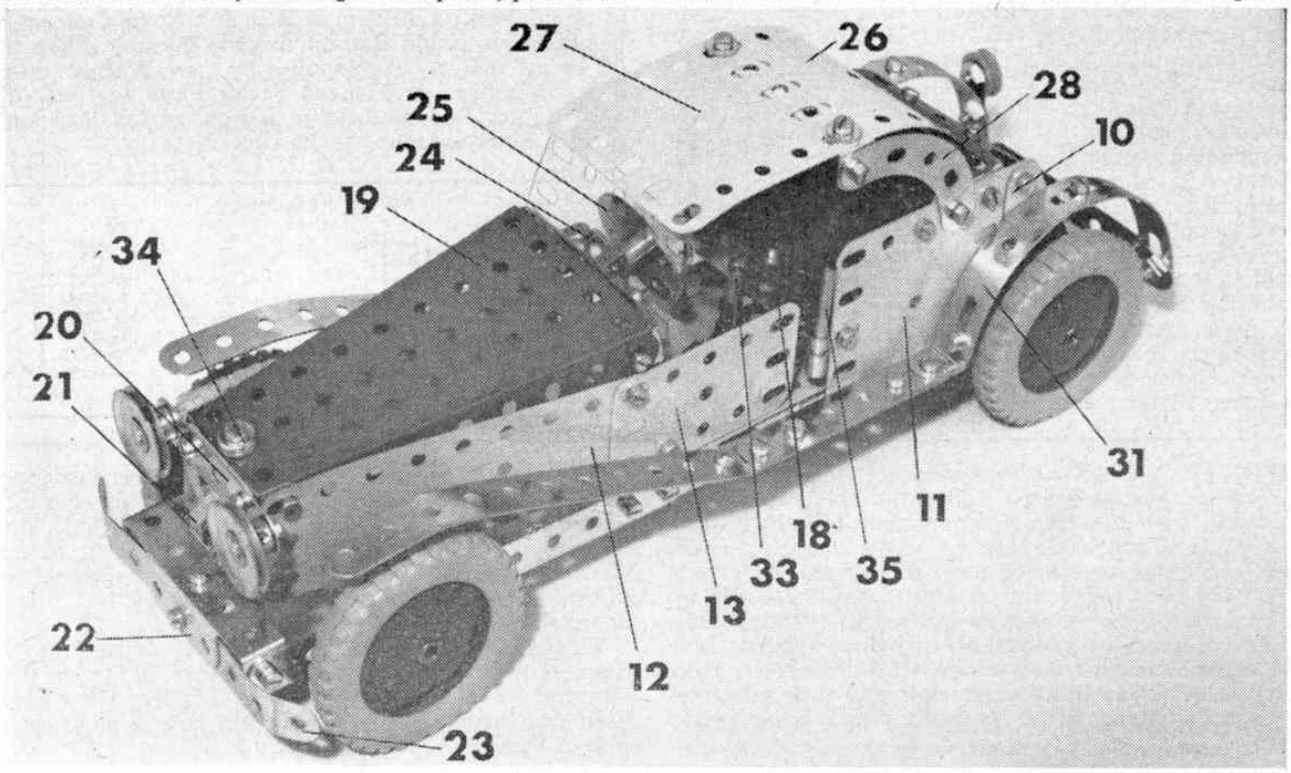

Strips 28, overlapped 3 holes, to the ends of which two 1 in. Pulleys are fixed to represent headlamps. Semi-circular Plate 26 is extended by a 2½ × 2½ in. Flexible Plate 29, shaped as shown to cover the front axle assembly. Held by Nuts in the centre of this Plate is a ½ in. Bolt on which two Obtuse Angle Brackets and an ordinary Angle Bracket 30 are held as can be seen in the illustration. Two Worms are fixed to the Obtuse Angle Brackets to give an indication of the distinctive engine cylinders present on the actual vehicle.

Finally, two Formed Slotted Strips 31 are bolted through the unused holes in the flanges of Flanged Plate 2 and are shaped over the front of the bonnet as shown. Plastic Plate 21 is connected to Flexible Plate 24 at each side by a 2½ in. Stepped Curved Strip 32 extended by a Fishplate.

PARTS REQUIRED

6—2	1—19s	1—51	2—189
2—3	2—22	3—90a	1—190
6—5	1—23	1—111a	1—191
7—10	2—32	5—111c	1—193
2—11	6—35	2—125	1—194c
1—11a	70—37a	1—126a	1—213
7—12	58—37b	1—186a	1—214
8—12c	7—38	3—187	3—215
2—17	1—48	2—188	1—Magic Motor
2—18a	3—48a		

Our second model is easily recognisable as a sports care similar to the pre- and early post-war M.G.'s To build it, two chassis members 1 are each built up from two 5½ in. Strips joined by a 3½ in. Strip to result in a 12½ in. compound strip, then the members are joined by two 2½ × ½ in. Double Angle Strips 2 and 3, a 2½ × 2½ in. Flexible Plate 4, attached by Angle Brackets, and a 2½ in. Strip 5 attached by Double Brackets 6. Fixed to the right-hand chassis member, in the positions shown, are a 2½ × 1½ in. Triangular Flexible Plate, a 2½ × 2½ in. Flexible Plate 7 and a 5½ × 1½ in. Flexible Plate 8, the last attached at one point only by means of a Fishplate as at 9.

In the case of the left-hand chassis member, this also carries a 2½ × 1½ in. Triangular Flexible Plate 10 and a 2½ × 2½ in. Flexible Plate 11, but, unlike the other side, these are "butt-jointed" by a 2½ × 1½ in. Flexible Plate. A 5½ × 1½ in. Flexible Plate 12 corresponding with Plate 8, is included but on this occasion is extended 2 holes rearward by a second 2½ × 1½ in. Flexible Plate 13.

The upper rear corners of Plates 7 and 11 are now connected by a 2½ × ½ in. Double Angle Strip 14 to which a 2½ × 1½ in. Flexible Plate 15 is bolted, the securing Bolts also fixing two Obtuse Angle Brackets in place. Attached to these Obtuse Angle Brackets is a further, shaped, 2½ × 1½ in. Flexible Plate 16 extended by a 2½ × 1½ in. Plastic Plate. Also bolted between Plates 7 and 11 is a 2½ × 1½ in. Flanged Plate 17 and another 2½ × ½ in. Double Angle Strip to which a 2½ in. Strip 18 is attached by a Fishplate, these three parts between them providing the seat.

A Flanged Sector Plate 19 is now bolted to the upper front corners of Flexible Plates 8 and 12, the securing Bolts also holding Angle Brackets in place. The Flanged Sector Plate is angled upwards and attached to the rear corners of Plates 8 and 12 by Fishplates, then a Flat Trunnion overlaid by a 2½ in. Strip 20 is fixed to the Angle Brackets at the front. Bolted to the Flat Trunnion is an ordinary Trunnion 21 to the lower flange of which a second Trunnion 22 is attached, the securing Bolt also serving to fix both Trunnions to Double Angle Strip 2. The front bumper is represented by a shaped 4½ in. Strip 23 attached to Trunnion 22, while 1 in. Pulleys are fixed to the ends of Strip 20 to act as headlamps.

Next, another 2½ × ½ in. Double Angle Strip is bolted between the flanges of Sector Plate 19 and, to this, is fixed a Reversed Angle Bracket 24 and a 2½ × 1½ in. Transparent Plastic Plate, the latter representing the windscreen. An 8-hole Bush Wheel 25 is attached to the free lug of the Reversed Angle Bracket to act as the steering wheel. The hood is built up from a 2½ × 2½ in. Curved Plate 26 and a 2½ × 2½ in. Flexible Plate 27 bolted to a 2½ × ½ in. Double Angle Strip which is then attached to Plates 7 and 11 by 2½ in. Stepped Curved Strips 28.

Two sets of combined mudguards and running board are each produced from a 5½ in. Strip 29 attached by an Obtuse Angle Bracket to a 3 in. compound strip 30, obtained from two 2½ in. Strips which is in turn attached by an Angle Bracket to two Formed Slotted Strips 31. The whole thing is attached to the appropriate chassis member by Angle Brackets. The wheels themselves are 2½ in. Road Wheels fixed on 3½ in. Rods journalled in the chassis members.

The model is completed by the addition of (a) a rear light, represented by a ½ in. Pulley 32, attached by an Obtuse Angle Bracket to the right-hand rear mudguard; (b) by an imitation gear lever supplied by a 1½ in. Rod 33 held in a Rod and Strip Connector bolted to an Angle Bracket fixed to Flexible Plate 7; (c) by a "mascot" 34 supplied by three Washers on a ⅜ in. Bolt fixed in Flanged Sector Plate 19; and (d) by a 1½ in. Rod 35 held in a right-angled Rod and Strip Connector bolted to Flexible Plate 11.

PARTS REQUIRED

6—2	1—18b	1—54	2—189
2—3	2—22	2—90a	4—190
9—5	1—23	5—111c	1—193
5—10	1—24	1—125	1—194
2—11	82—37a	2—126	1—200
12—12	80—37b	1—126a	1—212
5—12c	6—38	4—187	1—212a
4—16	6—48a	4—188	4—215
1—18a	1—51		

BATTLE *(continued from page 642)*

an enemy rumbling into sight, was able to draw an immediate bead on him and slam a shell forthwith into his vitals. Tank battles *did* go on for longish periods, and our desire to achieve some sort of realism closely coincides with the desire to ensure that the battle we are engaged in is not over in a matter of a few minutes.

It will be seen that some of the lighter weapons have no strike value at long range—this is correct, their muzzle velocities being pretty low and their effectiveness at anything above medium range being pretty feeble.

The range of some of the most powerful guns extends as we have already seen up to the equivalent of 2000 yards, or 60 in. This is not included in the Table, for the simple reason that visibility will be found to be rarely sufficient for efficient firing at this range to be carried out, particularly where the country is 'close' or wooded and hilly.

Finally, the result of the shot did depend on a couple of obvious conditions—whether it struck the target at which it was aimed, and if indeed the target itself was visible. These points will be our main concern in Part IX.