A 1″ Scale Reproduction of a T

Meccano Model Baltic T

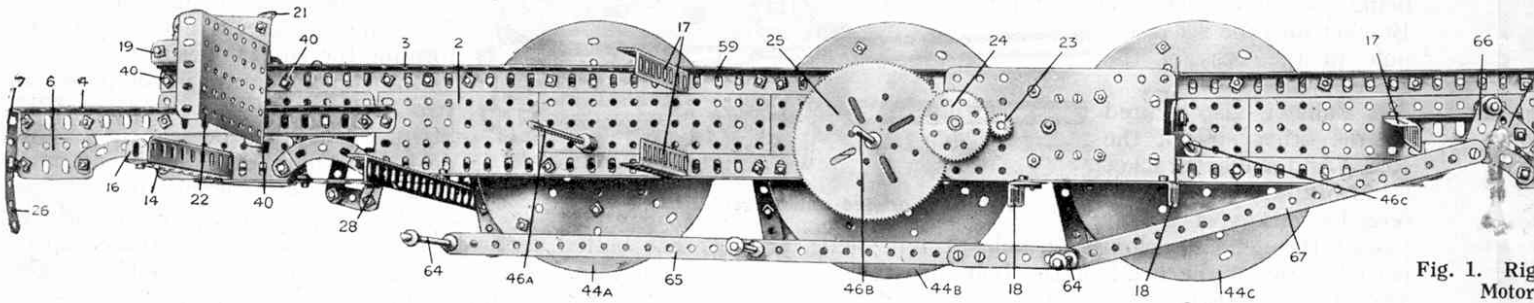

Fig. 1. Rig
Motor

THIS month we have pleasure in placing before our readers constructional details of one of the largest and most imposing Meccano models—a splendid tank locomotive.

The type of engine that our model represents is designed specially for express passenger work, and possesses a 4–6–4 or "Baltic" wheel formation. This type of engine has received in recent years well-merited attention from the locomotive designer, and it is to be found in increasing numbers working passenger trains non-stop over distances varying from 50 to 100 miles.

The tank engine, of course, possesses the advantage of being an absolutely self-contained power unit, as it carries both its fuel and water within its main frames, thus dispensing with the losses and inconvenience occasioned by the use of a tender. The fuel is carried in a special bunker at the rear of the cab, while water is contained in tanks placed on either side of the boiler and fire-box.

Although the Meccano model has not been designed to resemble any particular prototype, it reproduces the general design of the "Baltic" class of locomotive very closely. The model has been built to a scale of 1 in. to 1 ft., and actually measures 44 in. over-all. It is capable of moving under its own power, a Meccano 6-volt Electric Motor being fitted in the frame and coupled to the centre pair of driving wheels through reduction gearing, while a 6-volt Accumulator may be included in the cab for supplying current to the Motor.

One of the most interesting features of the model is the Walschaerts valve gear, which has been reproduced with remarkable accuracy. This gear forms an excellent model in itself, and clearly demonstrates the principle underlying this type of valve-motion. The gear will be fully described in the next instalment of this article.

In common with other Meccano models the tank locomotive is constructed entirely on the unit principle, which considerably simplifies the final assembly, besides following actual railway practice. This month the sections described and illustrated are the main frames, front footplate and buffer beams, and also the two bogie units. In a further instalment we shall continue the constructional details of the locomotive by describing the way in which the driving gear and valve mechanism, boiler, cab and other fittings are built. The method of assembling the main units will also be dealt with.

Construction of the Model : The Main Frames

The assembly of the main frames should be made the starting point of the construction. Fig. 3 shows the left main frame (looking toward the front of the model), while Fig. 1 gives a very clear idea of the appearance of the inside of the right-hand main frame, with the various connecting Girders and the Meccano

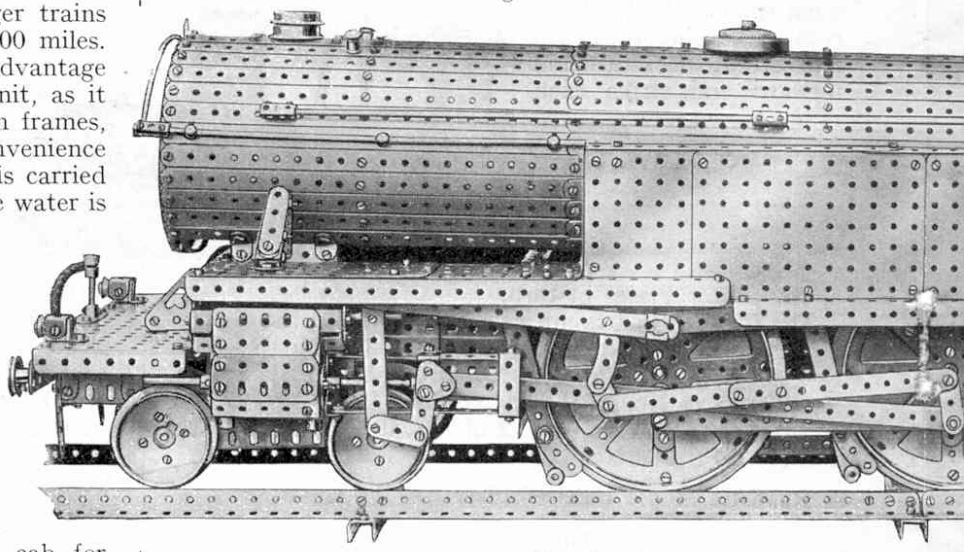

Fig. 2. General view of the Meccano m

6-volt Electric Motor in the positions they will occupy in the complete unit.

Each main frame (Fig. 3) consists of three $5\frac{1}{2}'' \times 2\frac{1}{2}''$ Flat Plates 1 with one $4\frac{1}{2}'' \times 2\frac{1}{2}''$ Flat Plate 2 at each end. One $24\frac{1}{2}''$ and one $18\frac{1}{2}''$ Angle Girder 3—overlapping one another by nine holes—are bolted to the top edges of the Plates 1 and 2 and a further $24\frac{1}{2}''$ Angle Girder (Fig. 1) is attached to the lower edges of the Plates. A $9\frac{1}{2}''$ Angle Girder 4 (Fig. 3) is bolted to the end hole of the $4\frac{1}{2}'' \times 2\frac{1}{2}''$ Plate 2 and to a $5\frac{1}{2}''$ Flat Girder 5. A 2″ Flat Girder 6 is attached to the $9\frac{1}{2}''$ Girder 4 by means of a $1\frac{1}{2}''$ Angle Girder 7 and also by a $1\frac{1}{2}''$ Strip which is secured to the other end of the 2″ Flat Girder and to the Girder 4. A $2\frac{1}{2}''$

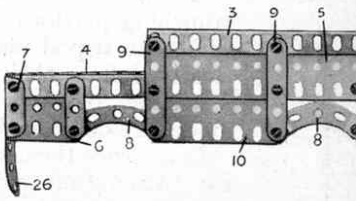

Typical Passenger Express Engine

Type Tank Locomotive

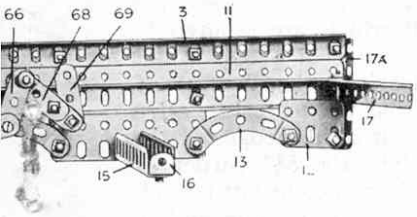

1. Right-hand frame unit, showing Motor and reduction gearing

small radius Curved Strip 8 is attached to the 2″ Flat Girder 6 as indicated in both Figs. 1 and 3, its other end being secured by a bolt passing through the bottom hole of the $2\frac{1}{2}''$ Strip 9 and the $3\frac{1}{2}''$ Flat Girder 10 (Fig. 3). A corresponding $2\frac{1}{2}''$ Strip 9 and Curved Strip 8 are bolted to the other end of the Flat Girder 10, the other end of the Curved Strip being attached to a Flat Bracket bolted to the end hole of the $4\frac{1}{2}'' \times 2\frac{1}{2}''$ Flat Plate 2. The two $2\frac{1}{2}''$ Strips 9 serve as connecting pieces to hold the various parts firmly together. A $2\frac{1}{2}''$ Strip 26 attached to the $1\frac{1}{2}''$ Angle Girder 7 represents the "guard iron."

The rear end of the main frame is built up in a somewhat similar manner to the front portion. A $9\frac{1}{2}''$ Flat Girder 11 (Figs. 1 and 3) is bolted to the end of the

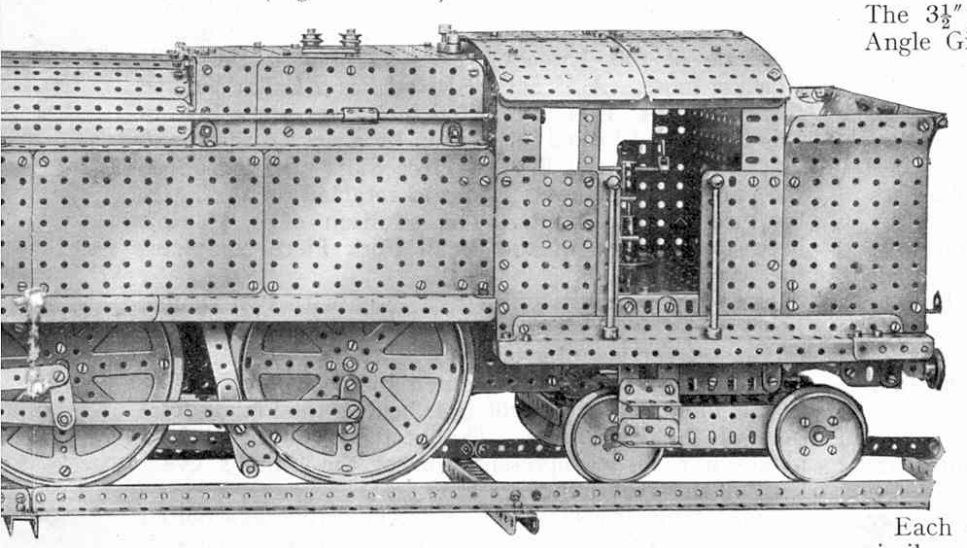

cano model Baltic type Passenger Locomotive

Plate 2, its other extremity being attached to a $2\frac{1}{2}''$ Angle Girder 17a to which is bolted a $1\frac{1}{2}''$ Flat Girder 12. A $2\frac{1}{2}''$ small radius Curved Strip 13 is attached to the Flat Girder 12. As will be gathered from the illustrations both the small radius Curved Strips 13 are secured to a $3\frac{1}{2}''$ Flat Girder which is attached to the rest of the frame in a similar manner to that employed in fixing the Flat Girder 10 at the front end. When both main frames have been completed, the various cross Girders 17 and 18 should be attached to one of the main frames as shown. The front and rear "bogie pin stretchers" 14 and 15 each consist of two $4\frac{1}{2}''$ Angle Girders bolted together so as to form a channel section girder, being attached to the main frame by means of $\frac{1}{2}'' \times \frac{1}{2}''$ Angle Brackets 16.

The Motor supports consist of two $4\frac{1}{2}''$ Angle Girders 18 secured both to the Motor and to the $24\frac{1}{2}''$ Angle Girders that are bolted to the bottom of the main frame. A $7\frac{1}{2}''$ Angle Girder 28 is bolted to the lower Girder, a Washer being placed between them on the shank of the retaining bolts.

Each half of the smoke-box saddle consists of a 3″ Angle Girder 19 (Fig. 1) bolted to the Angle Girders 3. A $2\frac{1}{2}''$ Flat Girder is secured to the Girder 19, flush with the rear end of the latter, and a $\frac{1}{2}'' \times \frac{1}{2}''$ Angle Bracket 9 is bolted in the front end hole of the Angle Girder. Two Flat Brackets 21 fixed to the $2\frac{1}{2}''$ Flat Girder will be used eventually to form a connection between the smoke-box and the smoke-box saddle. The $3\frac{1}{2}'' \times 2\frac{1}{2}''$ Flanged Plate 22 is secured to the 3″ Angle Girders 19, and also to the $9\frac{1}{2}''$ Angle Girder 4 by a $\frac{1}{2}'' \times \frac{1}{2}''$ Angle Bracket.

Before bolting the two main frames together the Motor should have its gearing inserted. The gearing is arranged as follows: a $\frac{1}{2}''$ Pinion secured to the armature spindle of the Motor meshes with a 57-teeth Gear Wheel that is fixed to the other end of a $2\frac{1}{2}''$ Rod, to which the $\frac{1}{2}''$ Pinion 23 (Fig. 1) is attached. The Pinion 23 meshes with the Gear 24, which is secured on a 2″ Rod journalled in the Motor side plates. This Rod carries a $\frac{3}{4}''$ Pinion that engages with the $3\frac{1}{2}''$ Gear 25 on the driving wheel axle 46b.

The two halves of the main frames may now be bolted together.

The Construction of the Bogies

Each of the leading and trailing bogies is exactly similar in construction; therefore one description should suffice for both. The construction of the bogies is shown clearly in Fig. 4. The sides of the frame consist of $7\frac{1}{2}''$ Flat Girders that are bolted to $7\frac{1}{2}''$ Angle Girders 128. The latter are connected together by $4\frac{1}{2}''$ Angle Girders at each end and the corners strengthened by means of Corner Brackets. The "bogie pin" 129 consists of a 1″ Rod held in a Double Arm Crank that is bolted to two $4\frac{1}{2}''$ Angle Girders which are placed together to form a channel-section girder and bolted, in turn, to the $7\frac{1}{2}''$ Angle Girders forming the bogie sides.

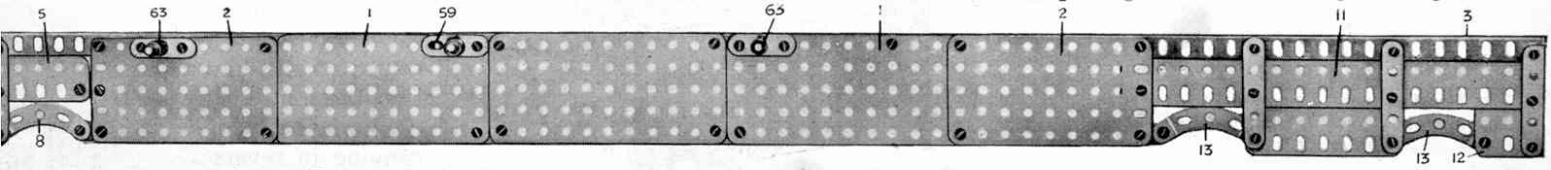

Fig. 3. Left-hand Frame unit, showing bearings for driving wheel brake arm pivots

Each of the bogie wheel axles consists of two 3″ Rods connected together by a Coupling. They are journalled in the slotted holes of the 7½″ Flat Girders, to allow the wheels to rise and fall independently when traversing uneven ground. The wheels themselves consist of Face Plates to which are bolted Wheel Flanges, and are secured rigidly to the ends of the 3″ Rods forming the axles.

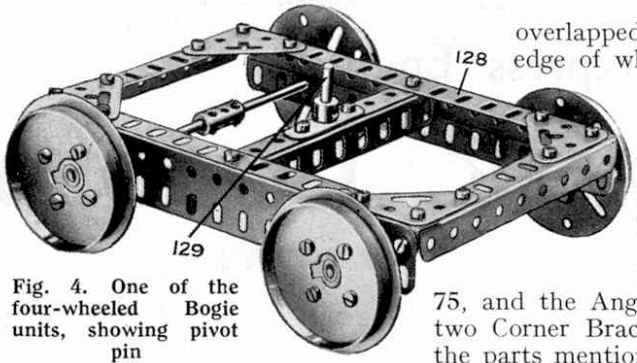

Fig. 4. One of the four-wheeled Bogie units, showing pivot pin

Front Footplating and Buffer Beam Unit

As will be seen from Fig. 5 the front portion of the footplate, together with the buffer beam, etc., forms a complete unit which, when erected, may be attached to the top of the main frames of the locomotive.

The longitudinal 12½″ Angle Girders 70 are connected together by Angle Girders 71 at the points shown in the Figure. The Angle Girders 71 each consist of two 5½″ Angle Girders overlapped five holes and bolted together rigidly. The rear Girder 71 has a 4½″ Angle Girder bolted midway along its bottom edge to give added stiffness to the whole and to form a convenient bracket by which to attach it to the top Girders of the main frames. Each half of the footplating, which consists of a 4½″×2½″ Flat Plate 72 and a 5½″×2½″ Plate 73, is bolted to the Girders 70 and 71 as shown. The Architrave 52, which is termed the "expansion link bracket" in practice, is attached to the underside of the Angle Girders 70 and 71 by the Bolts 52a, 52b. A similar bracket is mounted on the other side of the unit, of course. One Washer is placed on the shank of the Bolt 52b between the expansion link bracket and the Angle Girder 71 (this Bolt also secures the Angle Girder 70 to the Angle Girder 71). Two Washers are placed on the remaining Bolt 52a.

The outside steam pipes 74 each consist of a Double Bracket, bolted to the 5½″×2½″ Flat Plate 73, through which is passed a 1″ Screwed Rod. A second Double Bracket is also mounted on the Screwed Rod, on the ends of which are placed two Corner Brackets. A 2″ Strip secured to this latter Double Bracket finishes off this fitting effectively.

The front portion of the footplate unit carrying the buffer beam consists of two 5½″×3½″ Flat Plates 75 overlapped five holes, along the front edge of which are bolted two 5½″ Angle Girders. To the latter are secured the two 5½″ Flat Girders 76 that represent the buffer beam. A 5½″ Angle Girder 77 is bolted to the rear edge of the Plates 75 midway between the ends of the latter. To the 5½″×3½″ Flat Plates 75, and the Angle Girders 71, 77, are secured two Corner Brackets 78 which are secured to the parts mentioned by means of ½″×½″ Angle Brackets. These may be seen clearly in the illustration, where it may also be ascertained that the correct location for the Corner Brackets 78 is 2½″ from the edges of the Plates. A Flat Girder is bolted to the 5½″ Girder 77 to fill up the space between the latter and the Girders 71.

The brake pipe 79 consists of a Spring, one end of which is secured to the buffer beam 76, the other end being mounted on the end of a 1½″ Rod. The latter is mounted in a Double Arm Crank that is secured to the Plates 75. The "buffers" are 1″ fast Pulleys secured to Threaded Pins that are bolted to the buffer beam. A Collar is placed on each Threaded Pin to represent the buffer stock.

The "screw coupling" comprises a Threaded Boss 80 that is mounted between two ½″×½″ Angle Brackets bolted to the buffer beam. The bolts by which the Threaded Boss is attached to the Angle Brackets are inserted in the transverse tapped holes of the Threaded Boss, nuts on the shanks of the bolts being locked against the side of the Threaded Boss to prevent the bolts working loose. A 1″ Screwed Rod has a Collar secured to it, and a ⅜″ Bolt is inserted in the set-screw hole of this Collar and locked in position by a nut on the shank of the Bolt. A Small Fork Piece 81 is now placed on the end of the Screwed Rod and retained on the latter by means of lock-nuts. The addition of a ½″ Bolt between the jaws of the Small Fork Piece completes the coupling.

Each lamp consists of an Eye Piece with two Double Brackets secured to its boss by two bolts that are inserted in the set screw holes on each side of the boss. The front of the lamp is represented by a ½″ loose Pulley that is mounted on a Pivot Bolt held in the longitudinal bore of the Eye Piece. The head of the Pivot bolt makes a realistic representation of the "bull's eye" lens of the real lamp.

The "lamp irons" are ½″×½″ Angle Brackets bolted to the Plates 75 in the positions indicated, and the Eye Pieces of the lamps slide down on them. The lamps are thus readily detachable. A lamp iron should also be secured to the smoke-box in front of the chimney and three others—½″ Reversed Angle Brackets — should be attached to the rear of the coal bunker, one over each buffer and the other at the top centre of the Plate, so that the lamps may be used when the engine is running in reverse.

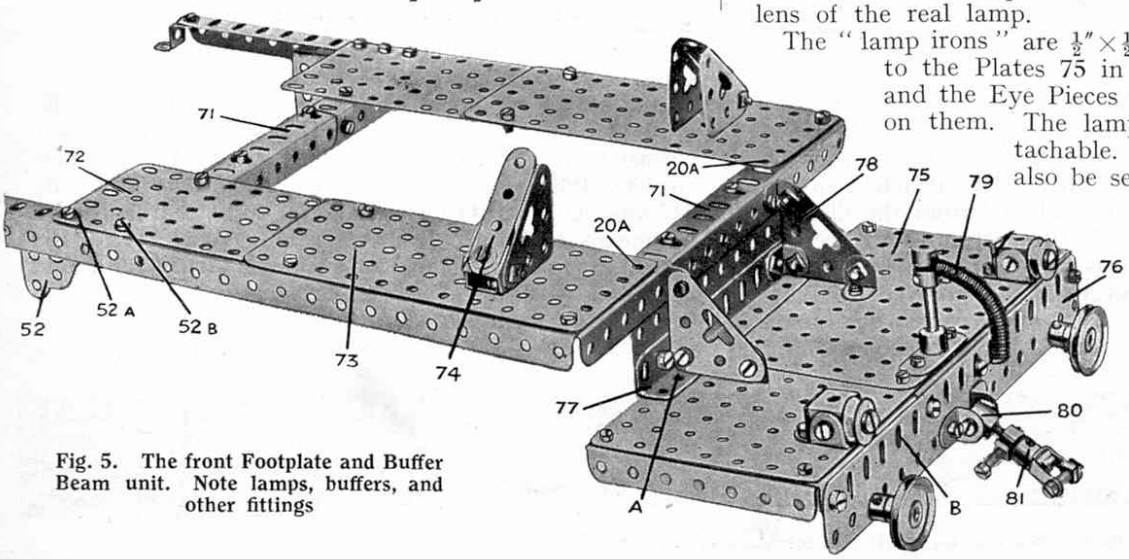

Fig. 5. The front Footplate and Buffer Beam unit. Note lamps, buffers, and other fittings

(To be continued)

Baltic Tank Locomotive

Completion of Instructions for Building this fine Model

IN the first instalment of this article dealing with the building of the "Baltic" type Meccano passenger tank engine, which appeared last month, the construction of the units comprising the main frame, side members, buffer beams, front foot-plating, and driving gear was described, and provided that the model-builder has followed our instructions step by step, he may now proceed with the assembly of the valve motion, connecting gear, boiler, cab, and side tanks, which are described in detail below.

Each unit on being completed should be laid aside until all the sections have been constructed, when the work of final assembly may be carried out with the aid of a few extra nuts and bolts.

The Cylinder Blocks, Crosshead, etc.

The left-hand cylinder block can be seen in position on the main frame in Fig. 7. The "cylinder" consists of five $2\frac{1}{2}'' \times \frac{1}{2}''$ Double Angle Strips secured to two Bush Wheels, which form the front and rear "cylinder covers." Two $\frac{1}{2}'' \times \frac{1}{2}''$ Angle Brackets 29 are secured to the rear cylinder cover by bolts which also hold two of the $2\frac{1}{2}'' \times \frac{1}{2}''$ Double Angle Strips in place, and to these Brackets are secured $4\frac{1}{2}''$ Strips 30 which represent the "crosshead guide bars."

The valve chest is composed of three $3\frac{1}{2}'' \times \frac{1}{2}''$ Double Angle Strips secured between two Bush Wheels. The valve spindle 38 is a $4\frac{1}{2}''$ Rod upon which is secured two 1″ fast Pulleys spaced apart by means of a Coupling, these last mentioned parts representing the piston type "slide-valve."

The cylinder and valve chest are mounted upon a $2\frac{1}{2}'' \times 2\frac{1}{2}''$ Flat Plate which, in turn, is held to the main frame by means of four $\frac{3}{4}''$ Bolts, a Collar and two Washers being slipped on to each Bolt before attaching to the frame, in order to secure correct alignment of the piston and valve rod with respect to the connecting gear.

The "lagging" plate 41, which consists of two $2\frac{1}{2}''$ Flat Girders held together by 2″ Strips, is secured to both the cylinder and valve chest. The $2\frac{1}{2}''$ Double Angle Strip 27a is held in place at the rear end by means of a Flat Bracket; a bolt could not be used here in the usual way as its head would foul the "combining lever" 54. Collars 43 secured to the lower portion of the cylinder represent the "cylinder drain cocks."

The "crosshead" consists of a Strip Coupling 32 which is secured to the end of a $6\frac{1}{2}''$ Axle Rod forming the piston rod. A 1″ length of Screwed Rod is secured in this Coupling and carries at either end an Eye Piece 33, Washers being placed on the Rod before fitting the Eye Pieces in order that these are spaced the correct distance apart.

A 1″ Triangular Plate is now attached to a 2″ Strip 34, by a nut and bolt, a Washer being placed under the head of the latter. A Bolt 35 is passed through one of the holes of the Triangular Plate and the top hole of the Strip 34, and two Washers are placed on the shank of the bolt, this then being screwed into the tapped hole of the upper Eye Piece 33. A $\frac{3}{8}''$ Bolt 36 is passed through the remaining hole of the Triangular Plate and inserted in the end tapped bore of the Strip Coupling 32. Two Washers are placed on the shank of the $\frac{3}{8}''$ Bolt between the Triangular Plate and the Coupling. The crosshead guide bars 30 are held rigidly at the rear end by a $1\frac{1}{2}'' \times \frac{1}{2}''$ Double Angle Strip 42, this also being fastened to the lateral $7\frac{1}{2}''$ Angle Girder 28.

Driving Wheels and Axles

Next construct the "driving wheels" 44a, 44b, 44c (Fig. 1). Each consists of a Circular Plate bolted to a Hub Disc, and a Bush Wheel secured to the centre by nuts and bolts. A Double Arm Crank 45a, 45b, 45c, is bolted to each driving wheel so that its centre is 1″ from that of the wheel. Six driving wheels in all will be required and when they are completed, they may be secured to the driving wheel axles 46a, 46b, 46c (see Fig. 1 in last month's article). Each of the latter consists of a $4\frac{1}{2}''$ Rod joined to a 1″ Rod by means of a Coupling. A 25 gramme Weight is bolted to the centre driving wheel 45b in the position shown. This is to balance the reciprocating masses of the connecting and coupling rods, etc. The driving wheels are secured to their respective axles by two set-screws inserted in each of the set-screw holes of the new style Bush Wheels that are bolted to the wheel centres.

The $3\frac{1}{2}''$ Gear 25 is secured to the centre driving wheel axle 46b as shown in Fig. 1. This Gear—as was mentioned last month—meshes with the $\frac{3}{4}''$ Pinion secured to the $2\frac{1}{2}''$ Rod that carries the 57-teeth Gear 24.

Each pair of driving wheels on any one axle must have their crank pins *exactly at 90 degrees to one another.* This is very important, for if the pins are not exactly at right angles the coupling rods will bind and so prevent the model working satisfactorily. The cranks in a two cylinder steam locomotive are set in the same way.

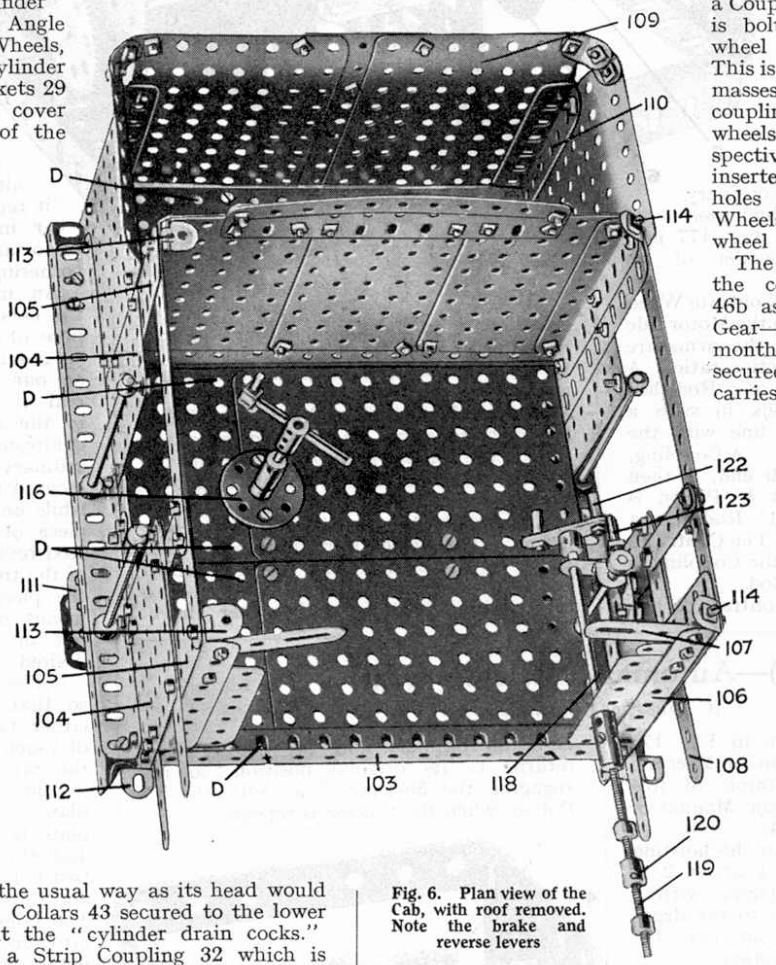

Fig. 6. Plan view of the Cab, with roof removed. Note the brake and reverse levers

The Motion (Valve-Gear, Connecting Rods, etc.)

The leading and trailing driving wheel crank pins consist of Pivot Bolts (47a in Fig. 7) which are held in the bosses of the Double Arm Cranks (45a, Fig. 7) by set-screws. One end of each of the "coupling rods" 48a, 48b, which consist of two $7\frac{1}{2}''$ Strips, is journalled on each Crank Pin and spaced away from the boss of each of the Double Arm Cranks by means of a Collar on each crank pin. This is to enable the coupling rods to clear the flanges of the driving wheels.

The crank pin 47b consists of a $1\frac{1}{2}''$ Rod held rigidly in the bore of the Double Arm Crank 45b by the latter's set-screws. A Collar is placed first on the crank pin, and then the coupling rods 48a and 48b, after which the connecting rod 49, consisting of a $12\frac{1}{2}''$ Strip, is slipped into place. Care should be taken to see that two Washers are placed on the crank pin between the connecting rod 49 and the ends of the two coupling rods. Lastly the "return crank" 50 is secured in place. This Crank must be set at a slight angle so that its end describes a circular path about the driving wheel centre.

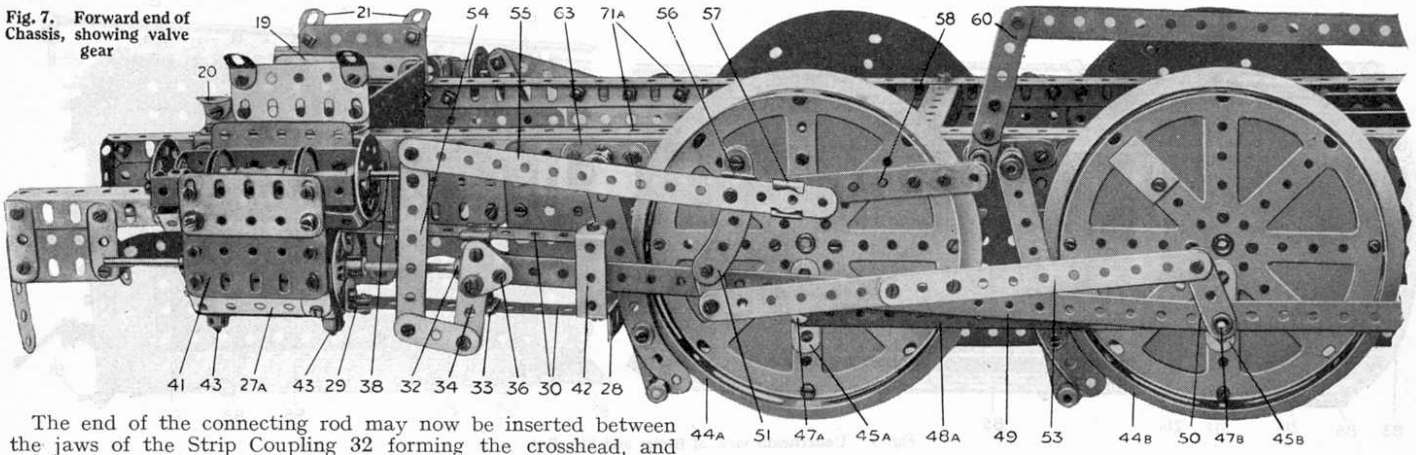

Fig. 7. Forward end of Chassis, showing valve gear

The end of the connecting rod may now be inserted between the jaws of the Strip Coupling 32 forming the crosshead, and the $\frac{3}{8}''$ Bolt 36 by which the connecting rod is attached to the crosshead, screwed home.

The "expansion link" 51 consists of two $2\frac{1}{2}''$ large radius Curved Strips connected together by $\frac{3}{8}''$ Bolts and spaced apart by four Washers on each of the bolts, a Flat Bracket being secured rigidly to the expansion link by the lower $\frac{3}{8}''$ Bolt. The expansion link will eventually be attached pivotally by means of a lock-nutted bolt (Standard Mechanism No. 262) to the Architrave 52 that is bolted to the footplating (see Fig. 5). An Eye Piece 56 slides freely on the front $2\frac{1}{2}''$ Curved Strip of the expansion link 51. In the actual engine this movement modifies the travel of the piston valve and thus regulates the backward and forward motion of the locomotive.

The motion of the return crank 50 is transmitted to the expansion link by means of the Strips 53, which are attached pivotally to both the return crank and the Flat Bracket on the expansion link by lock-nutted bolts.

The "combining lever" 54 comprises a $3\frac{1}{2}''$ Strip pivoted in the second hole from its top end on a set-screw which is inserted in the tapped hole of a Collar. This Collar is secured on the end of the valve spindle 38. The end of the combining lever is connected to the 2″ Strip 34 by a short pivoted link, consisting of a $1\frac{1}{2}''$ Strip attached to the Strips 34 and 54 by lock-nutted bolts. The "radius rod" 55—a $7\frac{1}{2}''$ Strip—is attached pivotally to the top end hole of the combining lever by a lock-nutted bolt. The other end of the radius rod is attached to the Eye Piece 56 by a $\frac{3}{8}''$ Bolt held in the bore of the Eye Piece by the latter's set-screw. The radius rod must be bent slightly, for the points of attachment to the combining lever and the Eye Piece 56 are not in a straight line.

The end of the radius rod projecting beyond the Eye Piece 56, or "die block," slides in an Eye Piece 57 that is attached pivotally to the $3\frac{1}{2}''$ Strip 58. This latter Strip is bolted rigidly to a Crank secured on the end of the weigh shaft (a $6\frac{1}{2}''$ Rod), journalled in the holes 59 of the main frames (Figs. 1 and 3). A second Crank to which a $2\frac{1}{2}''$ Strip 60 is bolted, is also secured to the weigh shaft in the position indicated, close to the main frame. The Strip 60 will be connected to the Threaded Boss 120 (Fig. 6) by means of a $12\frac{1}{2}''$ Strip when the model is assembled.

The right-hand motion is exactly similar in every respect to that shown in the illustrations except that the Crank to which the $12\frac{1}{2}''$ Strip is secured is not duplicated on the other end of the weigh shaft. The cranks 58 secured on each end of the $6\frac{1}{2}''$ Axle Rod forming the weigh shaft are parallel.

The Brake Rigging

Each of the "brake blocks" consists of a $2\frac{1}{2}''$ large radius Curved Strip bolted to a $4\frac{1}{2}''$ Strip 62 (Fig. 7); a Washer is placed beneath the head of the bolt securing the brake block to the $4\frac{1}{2}''$ Strip. Each of the $4\frac{1}{2}''$ Strips is hung from a pivot composed of a 1″ Rod secured in a Double Arm Crank 63 that is attached to the main frames in the position indicated in Fig. 3. The Strips are retained on the 1″ Rods by means of Collars. Each pair of "brake hangers" (as the $4\frac{1}{2}''$ Strips are usually termed) are connected together by a $6\frac{1}{2}''$ Rod 64 (Fig. 1) which is inserted in the bottom hole of the brake hangers, being retained thereon by Collars. A Strip 65 14″ long (obtained by bolting a $12\frac{1}{2}''$ and a 3″ Strip together) connects all the brakes.

The Crank 66 is secured on a 5″ Rod journalled in holes in the main frames, and is connected to the $6\frac{1}{2}''$ Rod 54 by a $9\frac{1}{2}''$ Strip 67. The latter is attached pivotally to the Crank 66 by means of a lock-nutted bolt. On the same Rod carrying the Crank 66 is secured a second Crank 68 which has its arm prolonged by a 2″ Strip. The end of the latter carries a $1\frac{1}{2}''$ Strip 69 that is pivotally attached to the end of the Crank 68. The "brake pull rods" 65 and 67 are retained on the $6\frac{1}{2}''$ Rods 64 by means of Collars half way between the right and left-hand set of brakes, so that the pull of the rods may be distributed equally and all the brake shoes operated simultaneously.

Construction of the Cab, Bunker, etc.

The floor of the cab (Figs. 6 and 10) is composed of six $3\frac{1}{2}'' \times 5\frac{1}{2}''$ Flat Plates, each pair of Plates overlapping seven holes in the direction of the width of the cab. In the direction of the cab's length the Plates are placed edge to edge or "butted together," as it is termed. Each side of the floor is bolted to a $9\frac{1}{2}''$ Angle Girder 102 (Fig. 10) extended 1″ by a 2″ Angle Girder that is secured to it. A $7\frac{1}{2}''$ Angle Girder 103 is bolted across the front edge of the floor as indicated in both illustrations. The $4\frac{1}{2}'' \times 2\frac{1}{2}''$ Flat Plates 104, which form the sides of the cab, are bolted rigidly to the Angle Girders 102.

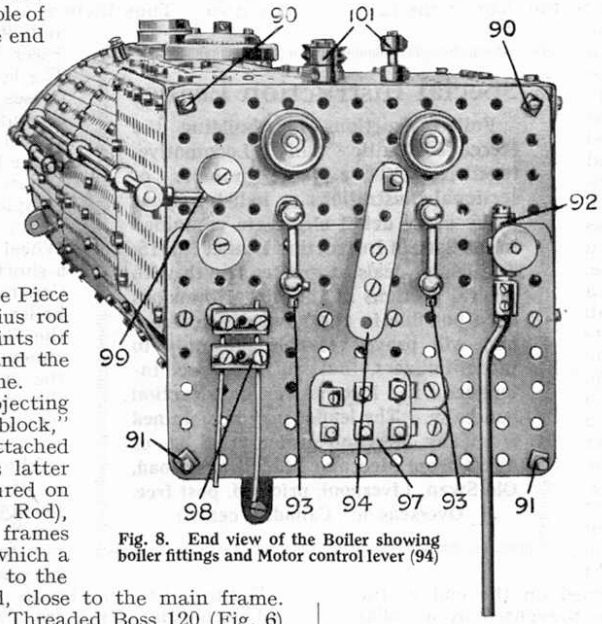

Fig. 8. End view of the Boiler showing boiler fittings and Motor control lever (94)

The bunker sides, which consist of $5\frac{1}{2}'' \times 3\frac{1}{2}''$ Flat Plates bent over at the top, are bolted to the edges of the two rearmost cab side Plates 104, and to the Angle Girders 102. Four $5\frac{1}{2}''$ Flat Girders 105 are secured to the Plates 104 in the positions indicated, whilst $4\frac{1}{2}''$ Angle Girders 106 are secured to the front edges of the foremost Flat Girders 105, a 2″ Slotted Strip 107 being secured to the top of each of the former. Four $3\frac{1}{2}''$ Strips 108 are attached to the cab side Plates 104 in the positions shown. Two $4\frac{1}{2}''$ Angle Girders bolted to the rearmost Flat Girders 105 form a convenient means of attaching the back of the cab to the sides. The back of the cab consists of three $4\frac{1}{2}'' \times 2\frac{1}{2}''$ Flat Plates, their bottom edges being bolted to a $7\frac{1}{2}''$ Flat Girder. A $5\frac{1}{2}''$ Flat Girder is secured midway along the top edge of the back of the cab, and a $5\frac{1}{2}''$ Curved Strip is, in turn, bolted to it.

The back of the bunker consists of two $3\frac{1}{2}'' \times 5\frac{1}{2}''$ Flat Plates 109 which are connected together by a $5\frac{1}{2}'' \times 2\frac{1}{2}''$ Flat Plate that overlaps each of the Plates by two holes. The back is now secured in position by being bolted to the $5\frac{1}{2}''$ Angle Girders 110. The extreme lower ends of the latter carry the rear buffer beam, which consists of a $7\frac{1}{2}''$ Flat Girder. The steps 111 each consist of two $1\frac{1}{2}''$ Angle Girders bolted to a pair of $3\frac{1}{2}''$ Strips that are attached to the Angle Girder 102.

It should be noted that the front cab side plates 104 have $4\frac{1}{2}''$ Flat Girders attached to their rear edges, the Handrail Supports carrying the handrails being attached to these Flat Girders. The bottom ends of the handrails rest on $9\frac{1}{2}''$ Angle Girders, to the

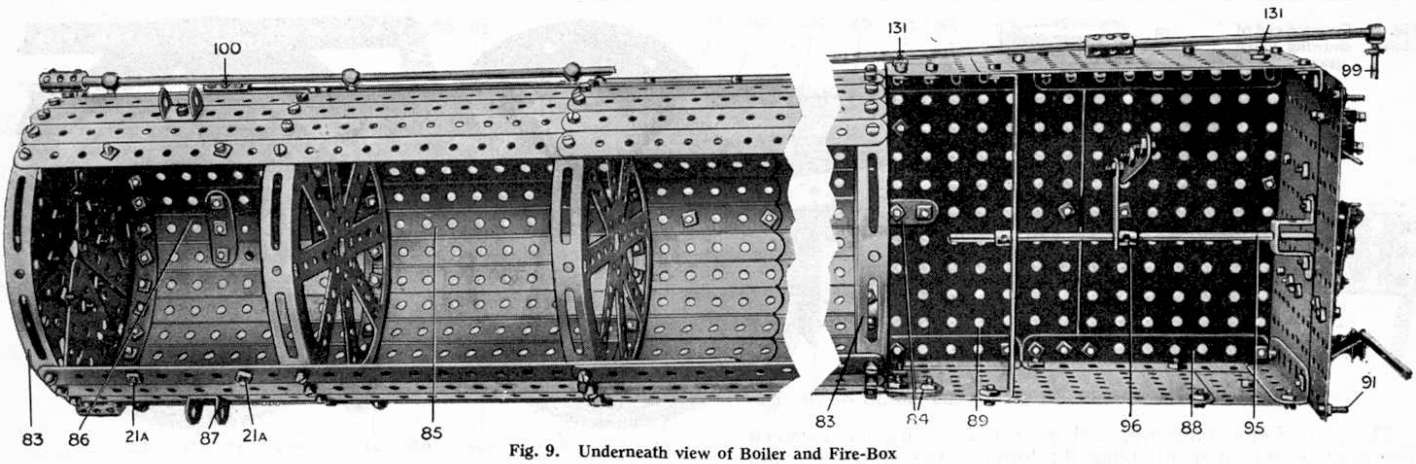

Fig. 9. Underneath view of Boiler and Fire-Box

front end of which 1″ Reversed Angle Brackets 112 are attached. This Girder forms part of the running board and is secured to a similar Girder bolted to the second line of holes from the bottom of the cab side Plates 104. The top ends of the Flat Girders 105 on each side are connected together by a 5½″ and a 2½″ Strip, overlapped two holes.

The cab roof (see general view, Fig. 2, in last month's article) consists of four 5½″ × 3½″ Flat Plates, each pair being overlapped four holes in the direction of the width of the cab. The two pairs of Plates are placed edge to edge and connected together by 5½″ Strips bolted across both sets of Plates. The cab roof is attached to the hinges 113 (Fig. 6) which permits of easy access to the cab's interior. When the roof is closed, the shanks of the bolts 114 project through holes in the cab roof, and nuts are placed on the ends of the bolts to keep the cab roof in place.

Brake Control and Reversing Gear

The hand brake consists of a 2″ Screwed Rod 115 journalled in a Bush Wheel 116 (Fig. 6) that is fixed to the floor of the cab. A Threaded Coupling is attached to the upper end of the Screwed Rod, whilst a Threaded Boss 117 is free to move on the lower extremity of the Rod, its travel only being limited by Collars secured on the Rod in the positions shown in Fig. 10. A 2″ Rod is held in the plain bore of the Threaded Coupling (Fig. 6) and a second 2″ Rod connected at right angles to the top of the former Rod by means of a Coupling, forms the handle. A Threaded Pin is secured to a Collar and fastened to one end of the handle.

A 3½″ Rod 118 (Fig. 6) is journalled in a 1″ × 1″ Angle Bracket secured to the cab side plate 104 by two ⅜″ Bolts, three Washers on each of the ⅜″ Bolts serving to space the 1″ × 1″ Angle Bracket from the cab side. The other end of the 3½″ Rod carries a Threaded Coupling and is journalled in a 3½″ Flat Girder bolted to the Angle Girder 106. A 3½″ Screwed Rod 119, secured in the tapped bore of the Threaded Coupling, carries a Threaded Boss 120, the travel of which is limited by two stops consisting of Collars which are secured to the Rod. The Rods 118 and 119 are rotated by means of the Double Arm Crank 122 that is fastened on the end of the former Rod. End play of the Rod 118 is prevented by a Collar 121 that is secured on the Rod 118 behind the Flat Girder in which the Rod is journalled.

The driver's brake valve 123 simply consists of a Threaded Pin that is inserted in the set-screw hole of a Collar secured to a 3″ Rod. The upper end of this Rod is retained in position by a ½″ × ½″ Angle Bracket bolted to the 1″ × 1″ Angle Bracket in which the Rod 118 is journalled, the other end of the Rod passing through a hole in the cab floor. This completes the construction of the cab unit.

Details of the Side Tanks

The construction of the side tanks is shown clearly in the general view. The top edges of the four 3½″ × 5½″ Flat Plates forming the tank sides are bolted to an 18½″ Angle Girder to which the tank top (a 12½″ and a 7½″ Flat Girder) is secured. The running board consists of a 9½″ and a 7½″ Angle Girder overlapped three holes and is bolted to the bottom edge of the tank sides. The front edges of the Flat Girders forming the tank tops should project beyond the tank sides to form a beading. To this end the Flat Girders are secured by their slotted holes to the Angle Girders 124. The ½″ × ½″ Angle Brackets 126 and 127 are for the purpose of securing the side tank to the side of the fire-box and front footplating respectively, as will be seen on reference to the general view that appeared in last month's article (Fig. 2).

The Boiler and Fire-Box

The details of the construction of the boiler and fire-box are shown clearly in Fig. 9 and also in the general view (Fig. 2). The "boiler shell" is composed of a number of lengths of 12½″ Strips, each length consisting of two 12½″ Strips overlapped six holes, and bolted to Hub Discs 83. The three 12½″ Strips 84, however, are overlapped four holes, so that the rearward projection portions may be bolted to the fire-box.

The Strip 85 is 9½″ in length, a continuation of it being formed by a 2½″ Strip 86 bolted to the Hub Disc representing the smoke-box door. Thus there is a gap between the ends of the Strips 85 and 86 in which is placed the boss of the lower Flanged Wheel forming the chimney. The latter is secured in place by a bolt that passes through the end hole of the 2½″ Strip 86 and one of the holes of the lower Flanged Wheel. A short Rod is secured in the boss of the Flanged Wheel, and a second Flanged Wheel secured thereon boss downward, completes the chimney.

The steam dome consists of a 1½″ Contrate Wheel placed on the top of a Wheel Flange, a short Rod which is held in the boss of the Contrate, secures the steam dome to the boiler top by means of a Collar placed on the Rod beneath the boiler. The Double Brackets 87 are for the purpose of securing the outside steam pipes 74 to the sides of the smoke-box. The front Hub Disc that represents the smoke-box door is filled in by a number of 2½″ Triangular Plates.

The side handrails (8″ Rods) are carried by Handrail Supports secured to the front portion of the boiler shell, the front rail (an 8″ Rod) being curved over the smoke-box front and secured to the side handrails by Couplings.

The top of the fire-box is composed of two 5½″ × 3½″ Flat Plates, and each side of the two 5½″ × 3½″ Flat Plates overlapped eight holes in the direction of their length. Each side is joined to the top of the fire-box by means of the 4½″ Angle Girder 88 and the 2½″ Angle Girder 89. The back plate (Figs. 8 and 9) is composed of two 5½″ × 3½″ Flat Plates that overlap one another by three holes; it is secured to 3½″ Angle Girders which are bolted to the rear edges of the sides of the fire-box. Two ⅜″ Bolts 90 (shanks outward) take the place of ordinary bolts at the two top corners of the back plate (Fig. 8). Two similar Bolts 91 are attached to the two lower corners of the back plate (Figs. 8 and 9).

The fire-box is attached to the boiler shell by the projecting portions of the three 12½″ Strips 84, only two of which are shown in Fig. 9, the other being on the opposite side of the fire-box.

Construction of the Boiler Fittings

Most of the boiler fittings are shown clearly in Fig. 8. The "injector" 92 consists of an Octagonal Coupling that is attached by an ordinary bolt to the fire-box back plate. The bolt is passed

Special Instruction Leaflet

Full instructions for building the Meccano Baltic Tank Locomotive, together with a large number of sectional illustrations in half-tone that make every detail clear, are contained in the Special Instruction Leaflet No. 15. The leaflet deals at greater length with several portions of the model than has been possible in the Magazine articles, and will prove valuable not only to model-builders, but to everyone interested in locomotive construction generally. The leaflet may be obtained from any Meccano dealer price 3d. or direct from Meccano Ltd., Binns Road, Old Swan, Liverpool, price 3d. post free. (Overseas 4d., Canada 8 cents.)

through a hole in the Plate and inserted in the tapped centre hole of the Coupling. A Threaded Pin is inserted in the remaining tapped centre hole of the Coupling and a ½″ fast Pulley secured to its shank. A 3½″ Crank Handle represents the intake pipe to the injector from the tanks.

The water gauges 93 are represented by 1½″ Rods held in Hand-rail Supports that are secured to the back plate. Between the two water gauges is placed the "regulator" 94. This consists of a Crank with a 2½″ Strip bolted to it, a Threaded Pin forming a handle. The Crank is secured to the end of a 6½″ Rod 95 (Fig. 9) that is journalled both in the back plate and in a 5½″ × ½″ Double Angle Strip which is placed across the fire-box near the front end. A Crank 96 is secured to the Rod 95 in a position vertically above the Motor switch, to which it is connected pivotally by means of two 2½″ Strips overlapped two holes. (The bottom of one of these Strips may be seen below the back plate in Fig. 8).

The fire-hole door 97 is represented by a 1½″ Flat Girder which is mounted on two Hinges secured to the back plate. The Hinges are spaced away from the back plate by means of two Washers on the shanks of each of the retaining bolts.

The "sight feed lubricator" 98 consists essentially of two Couplings that are secured to the back plate by ordinary bolts inserted in the tapped holes of the Couplings. Short lengths of Spring Cord—to represent the pipes that convey oil to the working parts of the engine—are inserted in the end transverse holes of the Couplings, and retained therein by bolts.

The "blower valve handle" 99 consists of a Threaded Pin, which is inserted in the set-screw holes of a Collar and secured on the end of a 4½″ Rod. This 4½″ Rod is joined to the Coupling 100 that represents the blower valve by means of two 11½″ Rods running along the side of the boiler.

The whistles 101 (low and high note !) are represented by Collars; the high note whistle consists of two Collars on a ¾″ Bolt, which is secured to the top of the fire-box by two nuts, whilst the low note whistle is represented by two Collars fixed a short distance apart on a 1½″ Rod; the Rod is held in place by a Collar beneath the fire-box top. The two Ross pop safety valves are represented by two pairs of ½″ loose Pulleys mounted at each end of a base composed of three 1½″ Strips laid one on top of each other; ¾″ Bolts are passed through the Pulleys and 1½″ Strips and secured to the fire-box top by nuts placed underneath the plate.

The two Spring Buffers that may be seen mounted on the smoke-box just behind the funnel are intended to represent the header vacuum release valves.

Assembly of the Model Units; Attaching the Footplating

The first part to be attached to the chassis (Fig. 7) is the front footplating and buffer beam unit (Fig. 5).

First remove the Flat Brackets 21 from the smoke-box saddle (Fig. 7) and secure the footplate unit in place so that the holes 71a in the Angle Girders 4 register with those in the 4½″ Angle Girder that is bolted to the underside of the Angle Girder 71 (Fig. 5). The Angle Brackets 20 (Fig. 7) must coincide also with the holes 20a (Fig. 5) so that bolts may be inserted in them. Bolts are also inserted in the holes A, B, and passed through corresponding holes in the Angle Girders beneath. The unit will now be found to be rigidly secured to the main frames and the Flat Brackets may be replaced on the smoke-box saddle.

Each expansion link 51 (Fig. 7) may be now attached to the lowest hole of the expansion link bracket 52 by means of the lock-nutted bolt that forms the pivot of the link. The expansion links are now able to rock about their pivots by the motion of the return crank 50.

Erecting the Cab Unit on the Main Frames

The cab unit (Figs. 6 and 10) is attached to the rear end of the main frame by means of bolts that are passed through the holes D (Fig. 6) on each side to the Angle Girders 3 beneath. The rear buffer beam is secured to the 2½″ Angle Girders 17a (Fig. 1), by four bolts that are inserted through each of the lines of holes E (Fig. 10).

The 1½″ Strip 69 on the Crank 68 (Fig. 1) is attached to the Threaded Boss 117 (Fig. 10) by means of a Bolt that is prevented from working loose by a nut locked against the Boss. In inserting the bolt in the transverse tapped hole of the Threaded Boss, care must be taken to see that the Bolt does not nip the Screwed Rod 115, for the Threaded Boss must be quite free on the latter, of course.

The 12½″ Strip (see Fig. 7) is connected to the Threaded Boss 120 on the screwed Rod 119 (Fig. 6) in a similar manner.

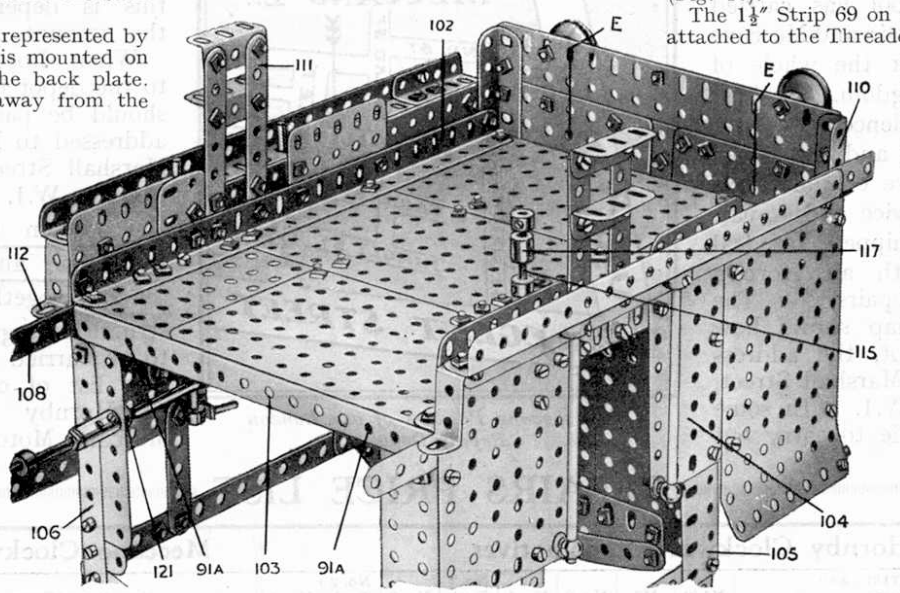

Fig. 10. Cab of Locomotive as seen from below. The rear buffer beam, steps and control spindles are shown clearly in this illustration

Placing the Boiler on the Main Frames

The boiler and fire-box (Fig. 9) may now be lowered into position on to the main frames, being attached to the Angle Girder 103 (Fig. 10) by means of the ⅜″ Bolts 91 projecting from the fire-box back plate. The shanks of the bolts are passed through the holes 91a in the Girder 103, and secured by nuts.

The smoke-box end of the boiler is secured to the saddle by means of the four bolts 21a (Fig. 9), the shanks of which project through the holes of the Flat Brackets 21 (Fig. 7). The ends of the steam pipes 74 (Fig. 5) are attached to the Double Brackets 87 (Fig. 9) by 1″ Threaded Rods and are held in place by nuts.

The ⅜″ Bolts 90 (Fig. 8) pass through the slots in the Slotted Strips 107 (Fig. 6). A 5½″ Curved Strip is now placed on the bolts 90 and nuts on the shanks of the latter serve to retain the Curved Strip. The cab roof may now be attached to the Hinges 113.

The leading and trailing bogies may be attached to their respective bogie pin stretchers 14 and 15. The bogie pins 129 (Fig. 4) are inserted in the centre hole of the stretcher and retained in position by means of Collars.

Two springs (part No. 43) should be attached by means of a ⅜″ Bolt to one of the 4½″ Angle Girders forming the ends of the bogie frames, their other ends being attached to the main frames on each side.

The side tanks are secured to the 3½″ Strips 108 (Figs. 6 and 10) by means of nuts and bolts. The 1″ Reversed Angle Brackets 112 and the ½″ Reversed Angle Brackets on the ends of the Girders 70 (Fig. 5) are then bolted to the running boards. The tanks are further secured to the sides of the firebox and the Plates 72 by Angle Brackets 126 and 127. By placing a Meccano 6-volt Accumulator in the cab, the model becomes entirely self-propelled.

List of Parts Required to Build the Model

55 of	No.	1	4 of	No.	8	29 of	No.	12	7 of	No.	18b	903 of	No.	37	2 of	No.	55a	9 of	No.	76	2 of	No.	103e	2 of	No.	120
2	„	1a	12	„	8a	1	„	12a	1	„	19s	22	„	37a	8	„	58	2	„	77	6	„	103f	2	„	124
6	„	1b	8	„	8b	2	„	13	2	„	20	56	„	38	73	„	59	1	„	80a	2	„	103g	5	„	125
9	„	2	9	„	9	4	„	13a	2	„	20b	6	„	43	9	„	62	1	„	81	5	„	103h	16	„	133
16	„	2a	25	„	9a	6	„	14	8	„	22	1	„	45	16	„	62b	8	„	82	6	„	103k	14	„	136
8	„	3	4	„	9b	1	„	15	8	„	23	2	„	48	17	„	63	2	„	89	8	„	109	9	„	137
1	„	4	4	„	9c	10	„	15a	1	„	23a	12	„	48a	1	„	63a	10	„	90	11	„	111	1	„	139
17	„	5	4	„	9d	1	„	16	15	„	24	6	„	48b	2	„	63b	8	„	90a	18	„	111c	1	„	139a
7	„	6	4	„	9e	1	„	16a	1	„	25	1	„	48d	2	„	63c	8	„	103	4	„	114	6	„	146
12	„	6a	6	„	9f	9	„	16b	2	„	26	10	„	50a	4	„	64	2	„	103a	6	„	115	6	„	147b
4	„	7	24	„	10	3	„	17	2	„	27a	28	„	52a	2	„	67	2	„	103b	2	„	116a	1	Electric	
4	„	7a	10	„	11	11	„	18a	1	„	27b	1	„	53	9	„	70	2	„	103c	11	„	118		Motor	
									1	„	28	13	„	53a	2	„	72	6	„	103d						