holding two curved $2\frac{1}{2} \times 1\frac{1}{2}$ in. Plastic Plates 19 in place.

Last of all, the rear axle, supplied by two $3\frac{1}{2}$ in. Rods joined by a Rod Connector, is fitted with a 1 in. fixed Pulley with Rubber Ring 20 and then journalled in Fishplates 21, bolted to Strips 3, where it is held in place by Spring Clips. Pulley with Rubber Ring 20 makes contact with Bush Wheels 12, thus providing a friction drive to the rotor when the model is pushed along on wheels provided by two 1 in. Pulleys 22, fitted with Motor Tyres and mounted on the ends of the rear axle.

PARTS REQUIRED

1—1	2—16	56—37a	2—142c
8—2	1—14	51—37b	1—155
2—3	1—17	14—38	2—188
1—5	4—22	1—48a	2—189
5—10	1—22a	1—51	2—194
2—11	1—23	1—54	1—213
5—12	2—24	3—111c	4—221
3—12a	6—35	1—125	

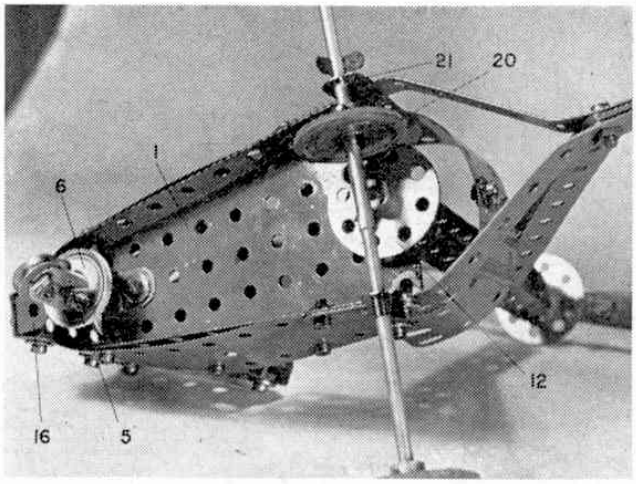

An underside view of the model showing the nosewheel and friction drive to the rotor. The nosewheel is controlled by a "joystick"-type steering handle.

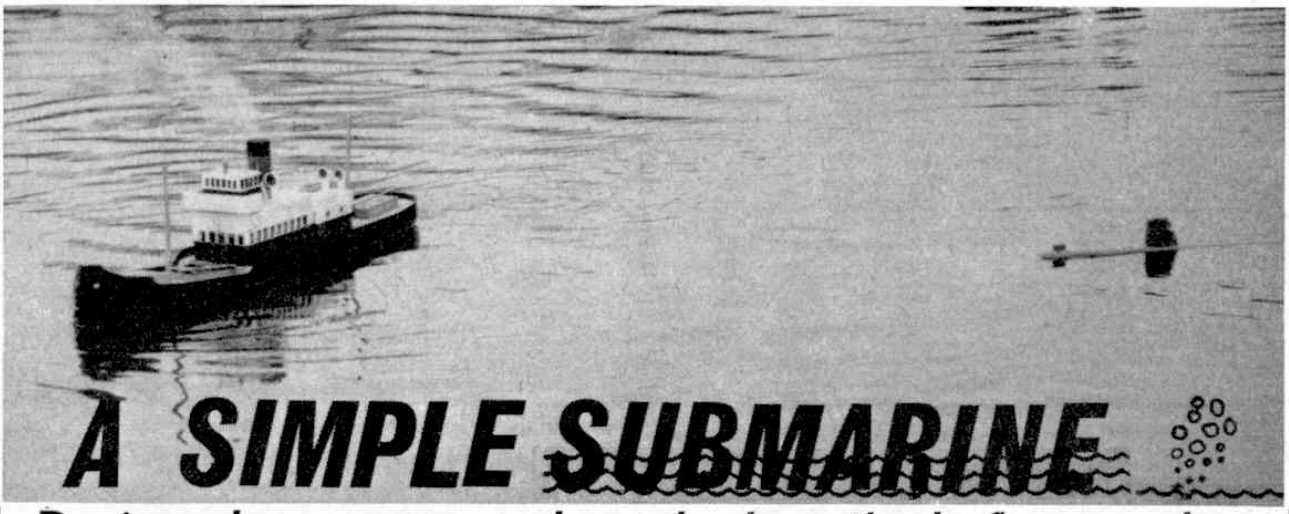

A SIMPLE SUBMARINE

Designed, constructed and described for readers by Lieut. Comdr. A. Greenhalgh R.N., C.Eng., M.I.Mech.E., A.F.R.Ae.S.

THIS LITTLE model is ideal and exciting for the younger members of the Model Shipbuilding Fraternity; the cost to build it is small and the time required is short.

Make the hull from a piece of spruce or similar soft-wood to the dimensions and shape shown on the drawing. The conning tower and dome are made from the same sort of wood as the hull. Balsa wood is not really suitable because it soaks up water very easily, particularly if not properly proofed. Any absorption of water, no matter what wood is used, will seriously affect the trim, and eventually, as the weight increases, the boat will fail to surface.

After carving each component to shape, sandpaper it smooth. The conning tower and dome are now glued and nailed to the hull. It is advisable to drill holes through these items to accommodate the nails and so avoid splitting the wood. Make the conning tower plane from tinplate and cement in place.

The next operation is to drill the hole for the spindle which carries the forward hydroplanes. This is drilled in from each side of the hull using a piece of 20 swg piano wire filed to a sharp point. The holes, of course, should meet at the centre.

The vessel can now be prepared for painting. Punch all nails to below the surface of the wood and fill the holes and any cracks with plastic wood or other suitable filler. When dry, remove the excess filler and rub the vessel down with fine sandpaper. A thin coat of undercoat paint should now be evenly applied. When thoroughly dry, apply a second coat and rub down again. Finish the model with a good quality enamel. The usual colour for a submarine is grey, but there are those who prefer them yellow!!

Let us now turn to the metalwork. The propeller and its bracket, hydroplanes and rudder, are made from the metal of a tin can. Cut a can up and flatten the metal obtained. Mark out the components using templates

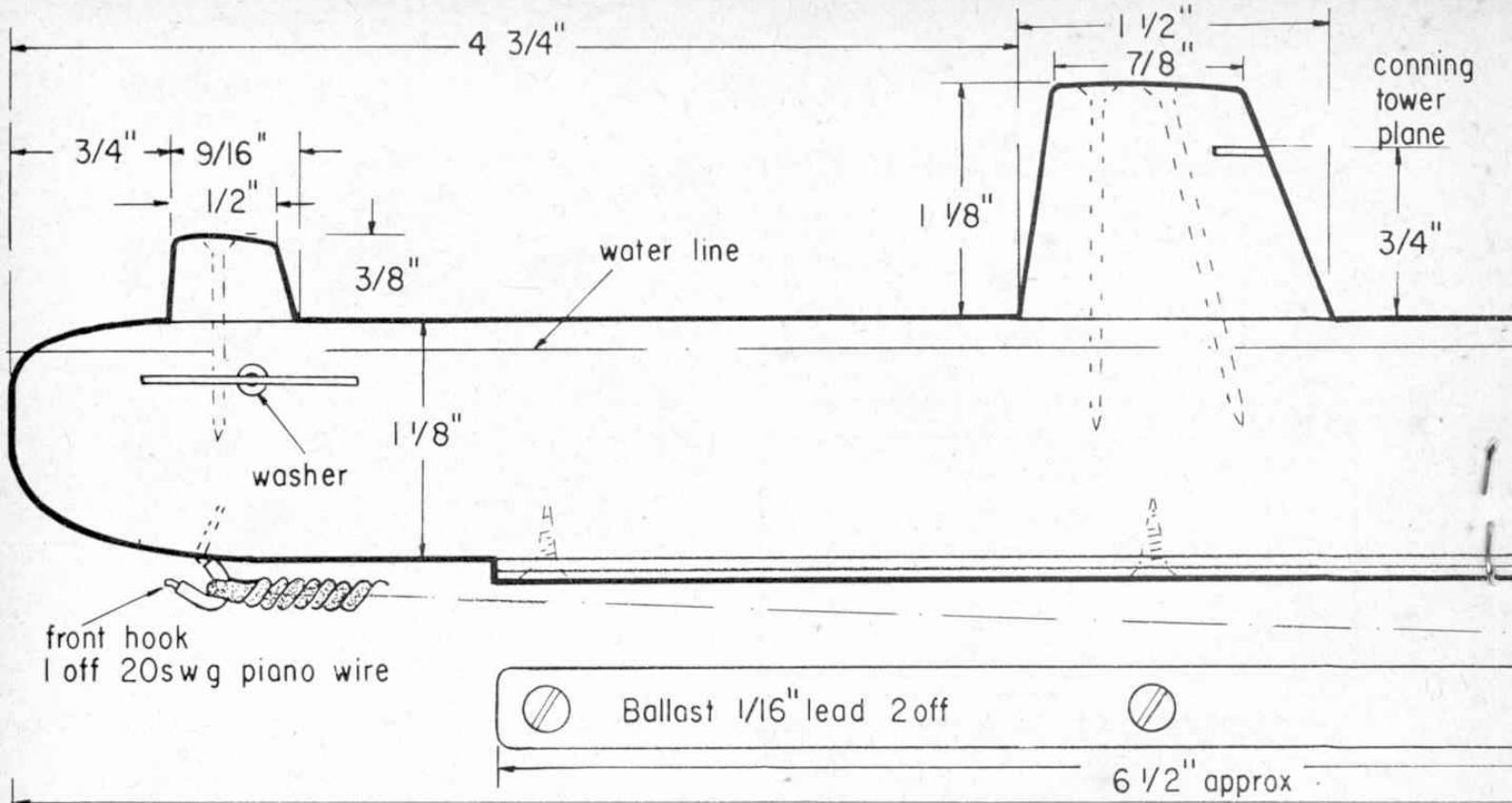

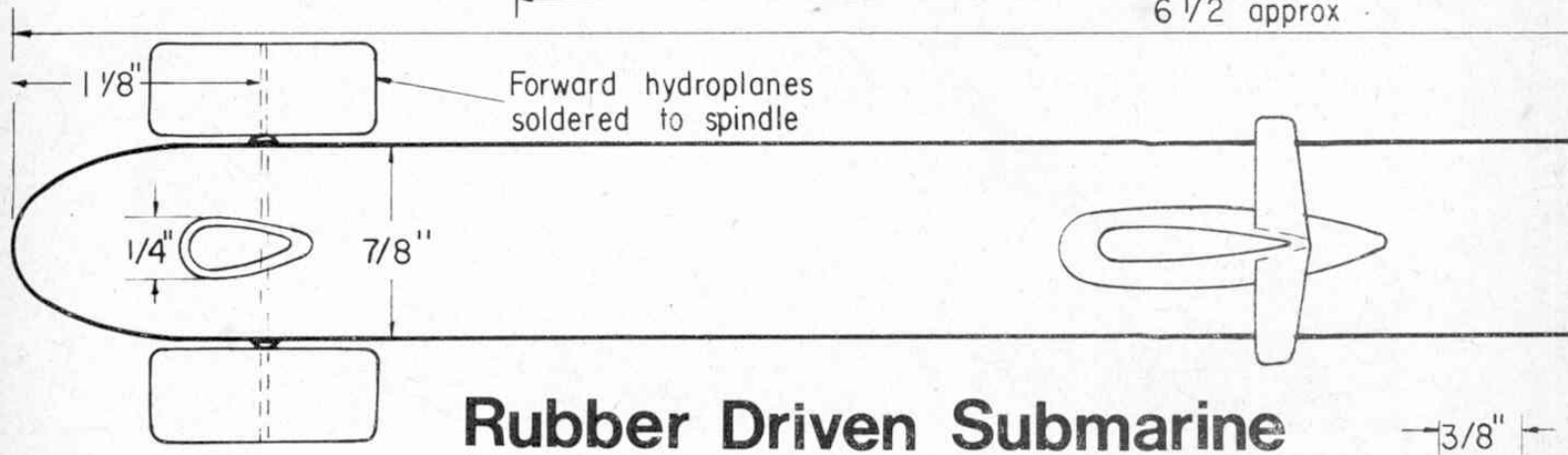

Rubber Driven Submarine

by A. Greenhalgh

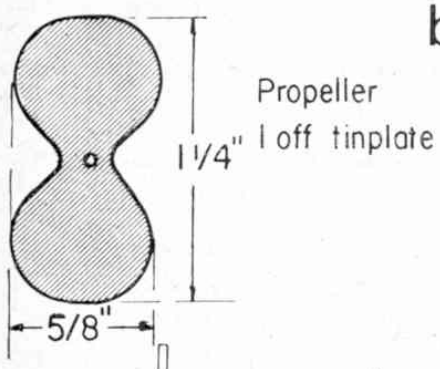

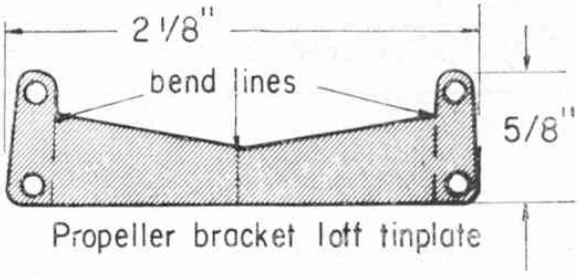

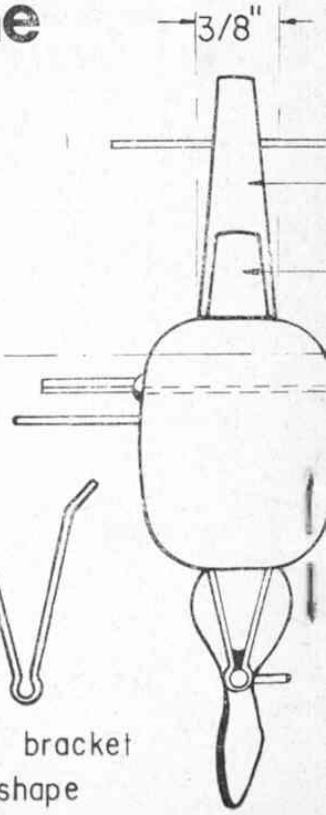

bend blades to this pitch

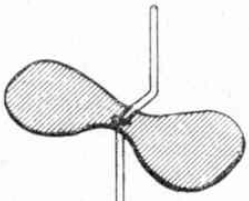

pitch bent on after soldering

Prop shaft 1 off
20swg piano wire

propeller bracket bent to shape

Hull, Conning tower and dome are made from spruce or similar wood. Balsa is not recommended, but if it is used it should be very well water proofed and heavier ballast is necessary

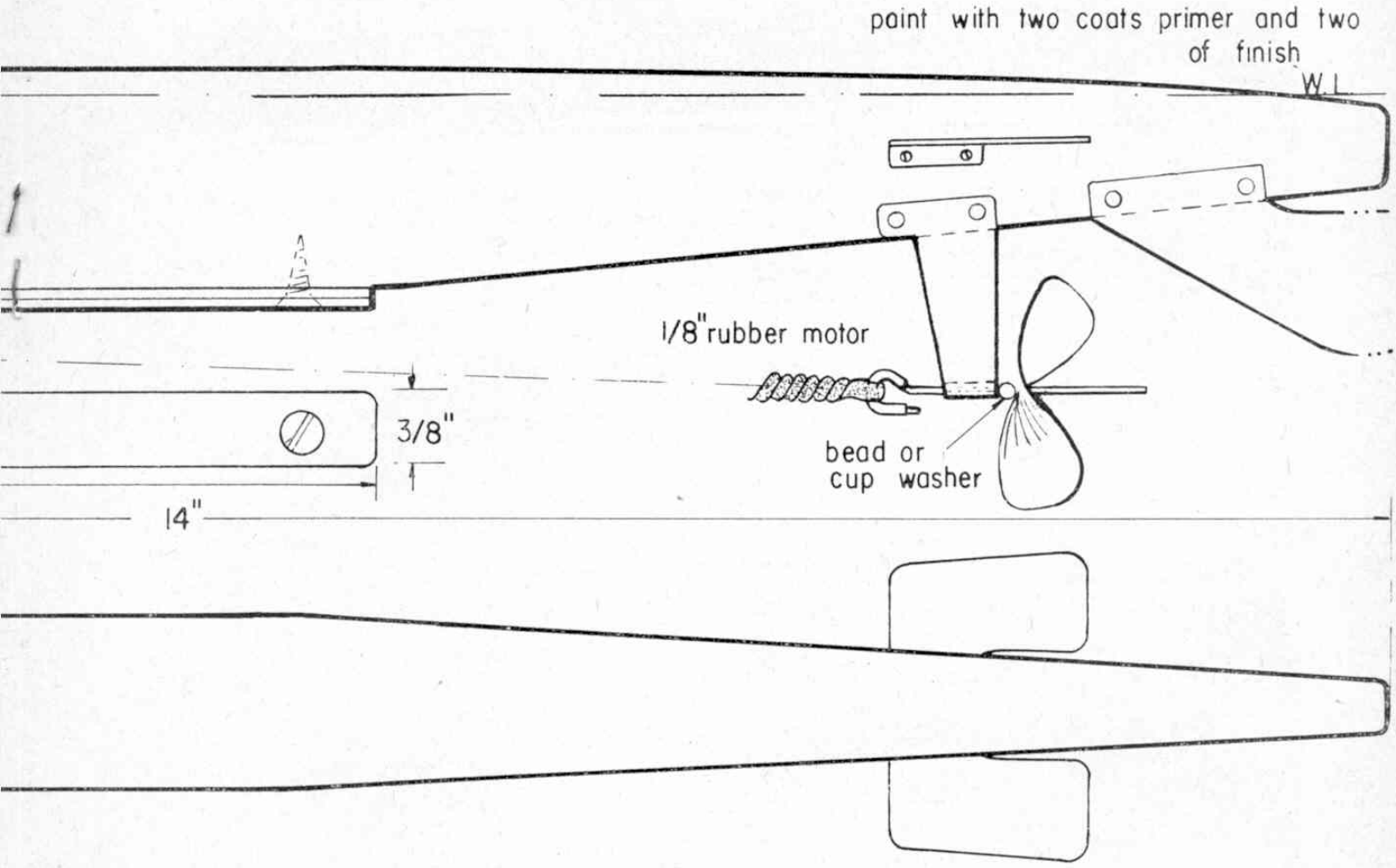

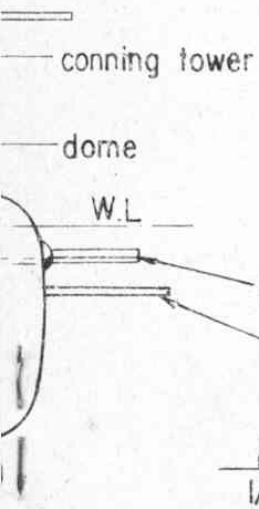

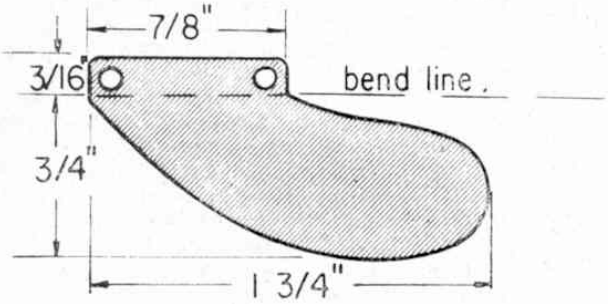

Rudder 1 off tinplate

Forward hydroplane spindle
1 off 20 swg piano wire

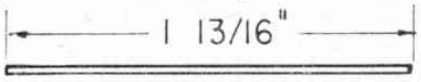

all holes in tinplate 3/32" diam.
screws 1/4" No 1 Rd. head

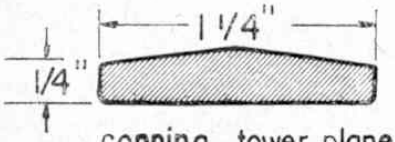

conning tower plane
1 off tinplate

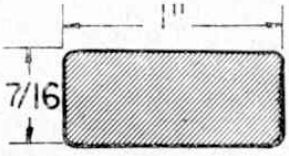

For'd hydroplane
2 off tinplate

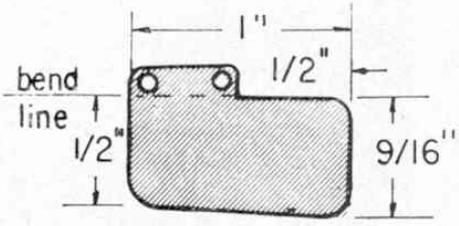

Aft. hydroplane
2 off tinplate

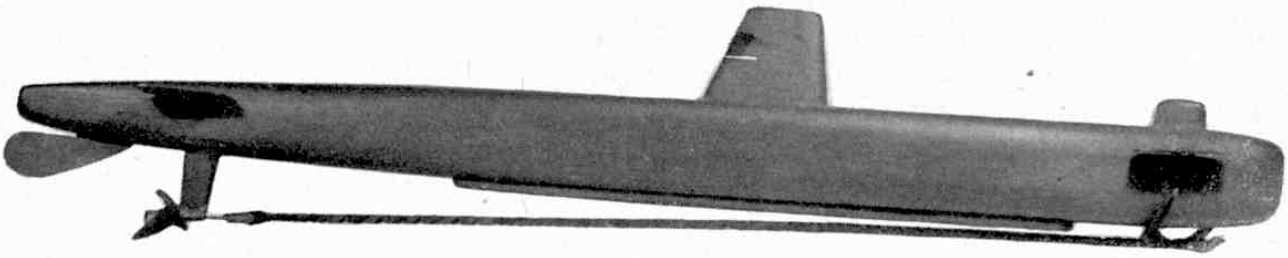

Side view of the completed submarine showing its simple yet convincing lines.

made from cardboard to the shapes given in the drawing. Drill all holes and file all sharp edges smooth. Bend the rudder and after hydroplanes to shape and attach them to the hull in the position shown using small wood screws

The propeller bracket requires a little more skill to bend it to the required shape. Take the flat outline shape and scribe a line which divides it across the centre. Bend at this line to an angle of about 90°. Place a piece of 20 swg wire in the "V" so formed and continue to bend until the top edges meet. Squeeze the bracket

The small crank on the end of the propeller shaft makes winding up a simple operation.

together with pliers at a point immediately above the wire so that the bearing hole is formed. Bend the edges of the bracket outwards to the correct angles to fit the hull.

The propeller shaft is made from 20 swg piano wire and is bent to the shape shown in the drawing. The propeller should be soldered to the shaft. Bend the pitch on the propeller as shown. Thread a bead, or two cup washers on the shaft and push into the bearing. The washers or bead act as a thrust race between the propeller and the bearing. A hook is bent in the wire to take the elastic motor. The assembly is now fitted to the hull by the four small woodscrews. The front hook for the elastic is bent from 20 swg wire and fitted as shown.

Make the forward hydroplane spindle from a piece of 20 swg piano wire. Push this through the hole already drilled near the bows. This spindle should be a tight fit in the hole so that the planes do not move when the boat is under way. Fit a small washer at each side as shown on the drawing and solder the hydroplanes to the spindle.

The ballast is made from lead of $\frac{1}{16}$ in. thickness, and is in two pieces. Cut a piece of lead to the dimensions given and screw it to the bottom of the hull in the position shown. Attach a similar piece of lead to the hull with two elastic bands. Now fit the elastic motor which consists of one loop of $\frac{1}{8}$ in. elastic. Place the submarine in water and adjust the weight of the second piece of lead by trimming off, or adding more, until the submarine floats to the correct water-line: as shown on the drawing. This is very important. Remove the elastic motor and ballast, and dry the vessel thoroughly. Attach the ballast permanently and give the whole vessel another coat of enamel paint. When this is dry, the elastic motor is refitted. Rubber tubing fitted over the hooks will prolong the life of the motor; that stripped off lighting flex is ideal.

Wind the model up and adjust the forward hydroplanes to an angle of about 30° to the horizontal, forward edges down. Released in the water, the vessel will gather speed and submerge, only surfacing when the motor is expended. The boat will remain on the surface if the forward hydroplanes are moved to an angle of about 10°, forward edges up. Should the model fail to submerge, re-check the water-line, adding ballast as necessary. Ensure that the pitch of the propeller is correct. When the submarine is properly trimmed, it will submerge to a depth of about four feet, a shallower dive is obtained by reducing the angle of the forward hydroplanes. It is safer to operate in a proper boating pool, for in a natural pond the model may well be caught up in weeds.

Left: The simple submarine cruising along just beneath the surface.

Centre: Shows the submarine surfaced at the end of a successful run.
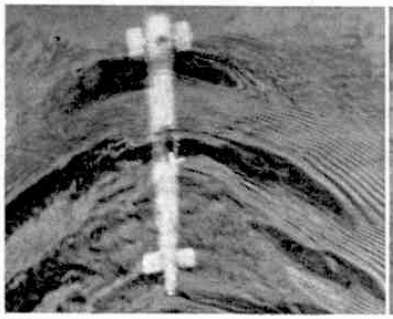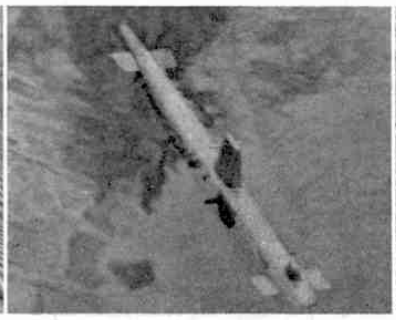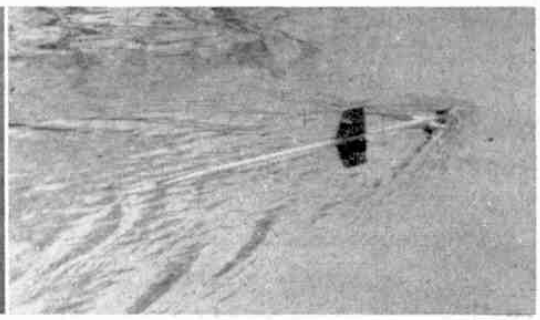
Right: With the forward hydrovanes tilted slightly upwards the submarine will cruise on the surface.