# A NEW MECCANO MODEL

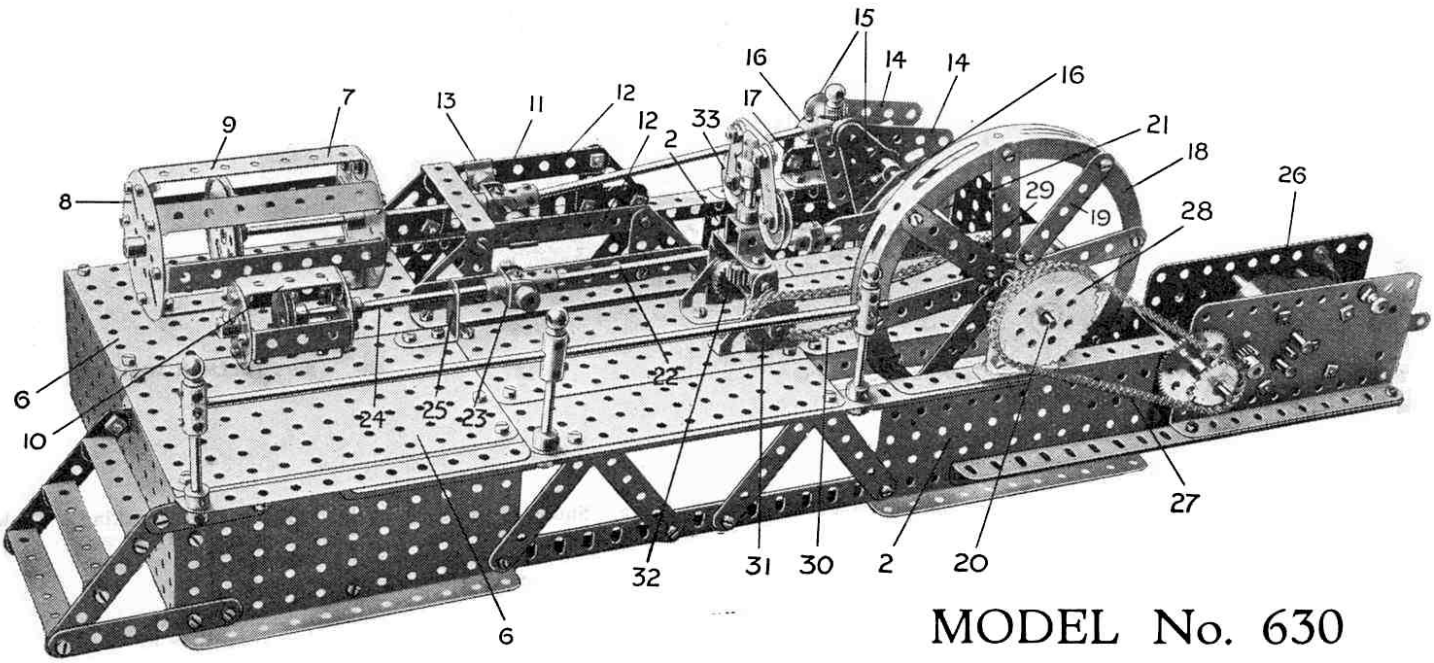


MODEL No. 630

## Horizontal Steam Engine

THIS month we have chosen as the subject of our new model a horizontal steam engine of the single-cylinder type, such as may be seen driving machinery in mills or factories. In this engine steam is admitted to the cylinder first at the front of the piston and then at the back. The piston is thus pushed alternately backwards and forwards, and from this movement such engines are called "reciprocating." The type of reciprocating engine illustrated is one of the simplest, and yet in spite of its simplicity the combined efforts of many inventors were necessary to produce it.

It is interesting to go back to the early days of the steam engine and see how it has developed, step by step, from a mechanical curiosity to a perfect working apparatus.

### First Practical Steam Engine

James Watt is commonly regarded as the inventor of the steam engine, but as a matter of fact a number of engines using steam had been produced before his time. Watt's great work lay in bringing the steam engine to a state of practical perfection.

The idea of using steam in a cylinder appears to have originated with Denis Papin, a Frenchman, and about the year 1688 he constructed a working model to illustrate his idea. The first really practical engine was constructed in 1710 by Thomas Newcomen, an Englishman, and it was used as a pumping engine. It consisted of a vertical steam cylinder, the piston of which was connected to one end of a beam pivoted in the middle. The other end of the beam was attached to rods working the pump. Around the cylinder was a jacket, to which cold water could be supplied.

When the piston in the working cylinder was at the top of its stroke, being raised by the weight of the pump rods, steam was admitted to the cylinder so as to drive out all the air. The steam was then shut off and cold water was admitted to the outer jacket. This condensed the steam in the working cylinder so that a partial vacuum was produced, and atmospheric pressure forced the piston down, thereby raising the pump rods. Each time this occurred one stroke of the pump was made and the operation was then repeated. Newcomen's engine, improved later in some details by its inventor, was used extensively in pumping water from mines. It will be seen that the engine was not a true steam engine, for the forcing down of the piston was done by atmospheric pressure.

### James Watt's Great Idea

A model of the Newcomen engine came into the hands of James Watt for repair, and while engaged on this task he hit upon the idea on which the modern steam engine is based.

In the Newcomen engine the working cylinder was first heated by steam and then cooled by water to condense the steam. Watt saw that this alternate heating and cooling resulted in a great waste of energy, and endeavoured to find some means of keeping the cylinder at an even temperature. It took him a long time to solve the problem, but at last he succeeded by condensing the steam in a separate vessel, instead of in the working cylinder itself.

### Talkative Workman Causes Trouble

Watt's improved engine, patented in 1769, was used entirely for pumping, as Newcomen's had been. In 1781 Watt took out another patent for an engine in which the reciprocating motion of the piston was converted into rotary motion, so that ordinary machinery could be driven. Watt had intended to obtain this rotary motion by means of the now familiar crank and flywheel, but he found himself prevented from doing so because a Birmingham button-maker named James Pickard had succeeded in obtaining a patent for this device a few months previously. Pickard apparently got the idea from one of Watt's workmen, who had been talking too freely and bragging about the great things that the rotary engine was going to accomplish.

Watt was very angry when he found what had happened, and for a while he was puzzled to overcome the difficulty thus created. He determined not to be beaten, however, and after trying various schemes he decided to use a device invented by his best workman, William Murdock. This device was called the "sun-and-planet" motion, and was utilised on Watt's rotary engines until Pickard's patent expired, after which the simpler and more efficient crank and flywheel were substituted.

### Watt's Final Improvements

Up to this time Watt's engines were "single acting"—that is to say the

**A New Meccano Model** (*cont. from page* 151)

cylinder was connected to the condenser only on one side of the piston, so that work was only performed during one stroke of the piston. In 1782 Watt took out a patent for connecting the cylinder to the condenser both back and front of the piston, thus making the engine "double acting," and consequently much more efficient.

In the same year he obtained another patent for a method of securing greater economy in the use of steam. The principle involved in this final improvement was that of shutting off steam from the cylinder when the piston had only travelled part of its journey, and leaving the rest of the thrust to be carried out by the expansion of the steam.

The brilliant inventions we have briefly described were Watt's chief contributions towards the perfecting of the steam engine. Watt found the steam engine a clumsy mechanism, very inefficient and wasteful of fuel, and only capable of working a pump. Through his inventions it became efficient and economical, and capable of working machinery of almost every kind.

**Constructing the Model**

This fine new model of a Horizontal Steam Engine may be made with a No. 6 Outfit, and its construction presents no difficulty. Begin by building the platform, an underneath view of which is shown in Fig. A.

**Parts required for Construction of Meccano Model 630 Horizontal Steam Engine**

| | | | |
|---|---|---|---|
| 2 of No. 3 | 1 of No. 13 | 1 of No. 29 | 2 of No. 63b |
| 11 „ „ 4 | 2 „ „ 14 | 160 „ „ 37 | 3 „ „ 70 |
| 8 „ „ 5 | 1 „ „ 15 | 20 „ „ 38 | 2 „ „ 76 |
| 1 „ „ 6 | 1 „ „ 15a | 1 „ „ 45 | 26″ „ „ 94 |
| 5 „ „ 6a | 2 „ „ 16 | 4 „ „ 48 | 1 „ „ 95 |
| 7 „ „ 8 | 2 „ „ 16a | 4 „ „ 48a | 3 „ „ 96 |
| 1 „ „ 8a | 5 „ „ 17 | 6 „ „ 48b | 2 „ „ 109 |
| 3 „ „ 9 | 2 „ „ 18a | 2 „ „ 50 | 2 „ „ 116 |
| 1 „ „ 9d | 1 „ „ 20a | 7 „ „ 52 | 1 „ „ 118 |
| 3 „ „ 9f | 1 „ „ 22 | 2 „ „ 52a | 2 „ „ 126 |
| 4 „ „ 10 | 2 „ „ 22a | 4 „ „ 53 | 3 „ „ 126a |
| 2 „ „ 11 | 3 „ „ 24 | 16 „ „ 59 | 4 „ „ 133 |
| 2 „ „ 12 | 3 „ „ 26 | 4 „ „ 62 | 3 „ „ 136 |
| 1 „ „ 12a | 2 „ „ 27a | 6 „ „ 63 | 1 4-volt Elec. Motor |

Three $12\frac{1}{2}''$ girders (1) are bolted to rectangular plates (2) at each end of the frame, other $12\frac{1}{2}''$ girders (3) being bolted to the remaining flanges of the girders. The ends of the bed frame are formed by small rectangular plates (4), and 3″ strips (5) brace the inner part of the frame.

As shown in the illustration on page 151, a portion of the top of the bed frame is enclosed by flat plates (6), and on these is bolted the cylinder (7) formed of face plates (8) connected by $3\frac{1}{2}''$ double angle strips (9). The valve-casing (10) is formed of bush wheels connected by $1\frac{1}{2}''$ double angle strips and is also bolted to the bed frame.

The cross-head (11), the construction of which will be followed from the illustration, is guided on the strips (12) by eye pieces (13) at each side. The crank is made up of triangular plates (14) representing the balance weights, secured to cranks (15). The main or crank shaft (20) is journalled in flat trunnions (16) secured to $1\frac{1}{2}''$ girders (17), which are in turn bolted to the flanges of the rectangular plates (2).

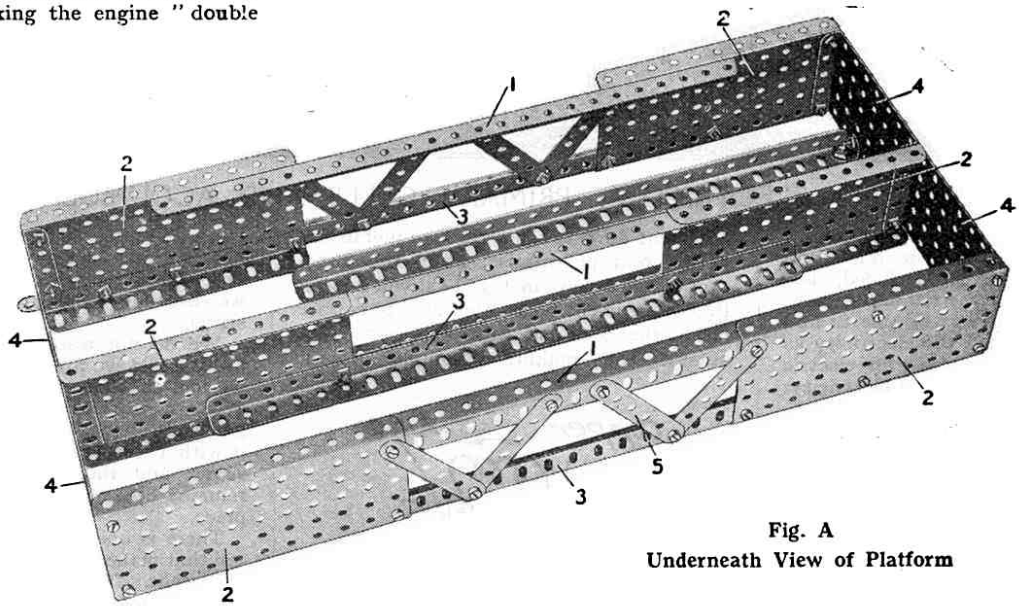


**Fig. A**
**Underneath View of Platform**

**Driving Details**

The fly-wheel is made of a large wheel flange (18) connected by strips (19) to a bush wheel secured to the shaft (20). The eccentric (21) is pivotally connected by a rod (22) to the fork piece (23) on the valve rod (24), which slides in the 1″ angle bracket (25). The motor (26) drives by sprocket chain (27) a 2″ gear wheel (28) on the shaft (20). A 1″ sprocket wheel (29) drives, by sprocket chain (30), another 1″ sprocket wheel (31) in the governor.

A contrate wheel (32) on the rod of the sprocket wheel (31) drives a $\frac{1}{2}''$ pinion on the vertical rotating rod of the governor, the weights of which are formed by two pulley wheels (33) pivotally hung by $1\frac{1}{2}''$ strips, lock-nutted in the outer holes of a horizontal $1\frac{1}{2}''$ strip. This strip is bolted in the slot of an octagonal coupling secured to the top of the vertical rod of the governor.

In the operation of an engine such as the model represents, the valve (10) controls the admission of steam to each end of the cylinders (7), thus causing the crank shaft (20) to be driven. When the engine speed increases too much, the weights (33) of the governor fly out and shut off steam, causing the engine to slow down again. The governor thus keeps the engine speed constant.

## The Meccano Clock

Full instructions for building the Meccano Clock are now available in the form of a beautifully-printed leaflet, with numerous illustrations. This will be sent, post free, to any address, price 4d. Similar leaflets dealing with the Meccano Chassis and Loom are also in stock, price 4d. each, post free. If ordered at the same time a copy of each leaflet will be sent, post free, price 10d. the three.

# Interesting Paragraphs

**Duct Keels for Liners**

It is reported that two Orient liners are to be fitted with duct keels. The chief advantage of this system is the fact that the water-tight bulkheads have not to be pierced for piping, and the ship is therefore more seaworthy should any collision occur.

* * * *

**A Powerful Overhead Travelling Crane**

An overhead travelling crane recently installed in the River Rouge repair shop of the Detroit, Toledo and Ironton Railway at Detroit, Mich., lifts a locomotive weighing 100 tons and turns it end for end in one minute. The grab has two sets of falls spaced 7 ft. apart, and is mounted on a turntable.

* * * *

**Hydraulic Tunnel at Niagara**

The new hydraulic pressure tunnel of the Niagara Falls Power Company, which has cost some £500,000 to construct, was recently opened for public inspection. This tunnel, which is 4,300 ft. in length and has a diameter of 32 ft. with a 2 ft. thick concrete lining, runs from an intake on the upper river, half a mile above the Falls, to another intake on the banks of the lower Gorge. The tunnel carries a volume of water sufficient to operate three hydro-electric power units, each of 70,000 horse-power capacity, in the power-house addition below the Gorge bank.