A Model Harmonograph

Build this fine Designing Machine

THE complete Harmonograph is seen in Fig. 1. It consists of a pendulum that carries a table at its upper end and is mounted pivotally in such a manner that it is free to swing in any direction. When the pendulum is set in motion a ball pen suspended above the table traces out a design on a piece of paper attached to the table. The addition of a second pendulum, flexibly attached to the lower end of the first one, makes the designs produced by the machine more intricate.

The base of the Harmonograph is a box-shaped structure built by joining the ends of two 12½″ Angle Girders by 5½″ Strips. Four 2½″ Strips are bolted vertically to the ends of the Angle Girders; the upper ends of the forward pair are connected by a 5½″ × 2½″ Flanged Plate 1 and those of the rear pair by Angle Brackets and a 5½″ Strip. Two 12½″ Strips are also bolted between the shorter flanges of Plate 1 and the rear 2½″ Strips.

Each side of the base consists of two 4½″×2½″ Flexible Plates and one 2½″×2½″ Flexible Plate, which are bolted between the 12½″ Strips and the Angle Girders. The top of the base consists of a 4½″×2½″, a 2½″×2½″ Flexible Plate and a 2½″×1½″ Flexible Plate, together with one 5½″×1½″ Flexible Plate 2. A 5½″ Angle Girder is bolted to Angle Brackets that are fixed in the 6th from end holes in the 12½″ Strips of the base. The Flexible Plates are arranged as shown in the illustration and are supported at the sides of the base by Angle Brackets. A 9½″ Strip 3, bolted down the centre of the base, strengthens the structure

Two 12½″ Angle Girders are bolted at one end to a 5½″ Strip 4 fixed to the base in the position shown. They are bolted also to the Flanged Plate 1, and to them two Flat Trunnions 6 and 7 are fastened, each bolt carrying two Washers on its shank between the Flat Trunnion and Angle Girder. Reversed Angle Brackets, one of which is shown at 8, are then bolted to the inner sides of the Flat Trunnions, and through the free end hole of each Bracket a bolt is fastened to form the supports for the swivel frame 9, which is constructed by joining two 2½″ × ½″ Double Angle Strips with 1½″ Strips. Two 3″ Screwed Rods passed through the centre holes of the 1½″ Strips are screwed into the boss of a 1″ Pulley 10, which holds a 11½″ Rod in its boss. This Rod is joined at its lower end to the pendulum by a Coupling.

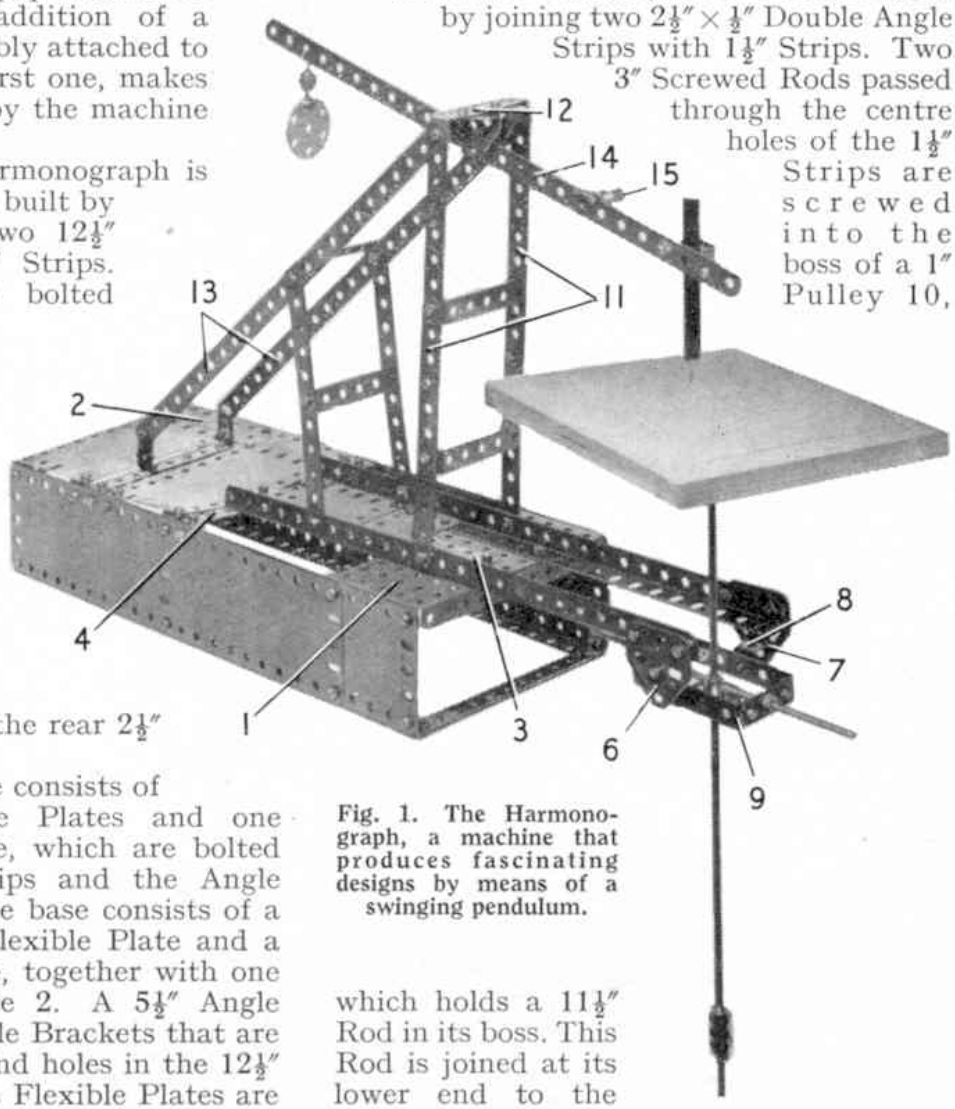

Fig. 1. The Harmonograph, a machine that produces fascinating designs by means of a swinging pendulum.

The pendulum consists of three or four 11½″ Rods coupled end to end, and carries a bob weight, which can be made up from any convenient parts or pieces of metal available. The weight should be about 1 lb.

The designs are drawn on sheets of paper pinned to the table, which is of wood and is approx. 6 in. square. A Bush Wheel is

screwed to its underside and this is fixed on the end of the 11½″ Rod held in Pulley 10. If desired a Hinged Flat Plate can be used as a table by fastening it to the Bush Wheel by two Double Brackets. The paper used should be of good quality and have an even surface. Rough paper, and also paper with a highly finished surface, should not be used. Ordinary writing paper will do.

The support for the pen arm consists of two compound strips 11, each comprising two 5½″ Strips overlapping four holes, which are secured to the 12½″ Girders on the top of the base. The Strips 11 are joined at their upper ends by a Double Angle Strip 12, the bolts holding also two 12½″ Strips 13. The lower ends of the 12½″ Strips are fastened to Fishplates bolted to the lugs of a further 2½″ × ½″ Double Angle Strip that is fixed to the base of the model. The pen arm 14 is a 12½″ Strip and is pivotally mounted on a lock-nutted ¾″ Bolt to Trunnions bolted underneath the Double Angle Strip 12. Washers and nuts are used to space the arm centrally on the Bolt. It is best to use a ball pen and this can be held in a Double Bent Strip fixed to the pen arm as shown. A lock-nutted Bolt can be used to grip the pen lightly and hold it in place.

The pressure of the pen on the paper can be regulated by adjusting a balance weight 15, which is moved along the arm until the pen just rests lightly on the paper. Another weight at the rear end of the arm can be used to give additional adjustment. When the model is completed some very interesting effects can be obtained by superimposing one design on another, and by using a compound pendulum designs of a more intricate type can be produced. A compound pendulum is made simply by making up a weight, such as a quantity of nuts and bolts enclosed in two Boiler Ends and then connecting the extra weight to the end of the main pendulum by a piece of string about 6″ in length. Also by adding extra weights to the pendulum the latter will continue to swing for a longer period. Another way of introducing variety into the designs is to vary the weights on the two pendulums, increasing the load on one and slightly decreasing that on the other.

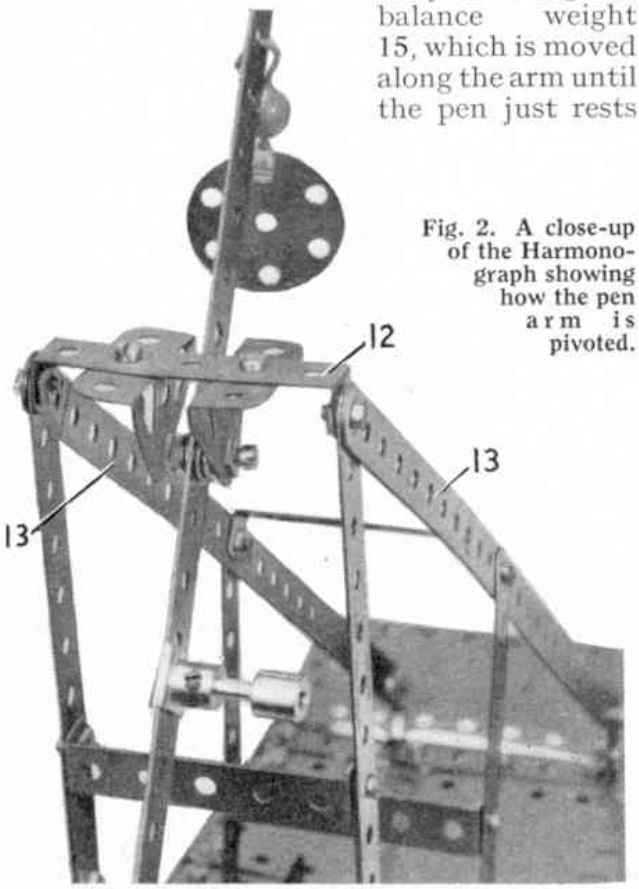

Fig. 2. A close-up of the Harmonograph showing how the pen arm is pivoted.

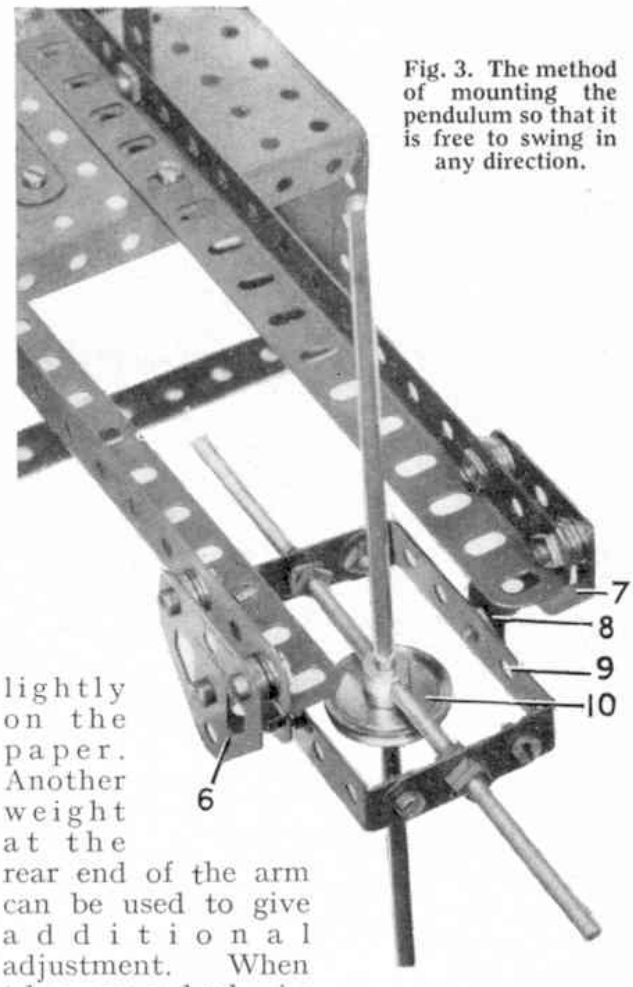

Fig. 3. The method of mounting the pendulum so that it is free to swing in any direction.

Parts required to build the Harmonograph: 5 of No. 1; 1 of No. 1a; 10 of No. 2; 4 of No. 5; 2 of No. 6a; 4 of No. 8; 3 of No. 10; 9 of No. 12; 4 of No. 13; 1 of No. 22; 1 of No. 24; 1 of No. 24c; 95 of No. 37a; 89 of No. 37b; 14 of No. 38; 1 of No. 45; 8 of No. 48a; 1 of No. 50; 1 of No. 52; 1 of No. 57c; 1 of No. 63; 2 of No. 80; 1 of No. 111a; 6 of No. 111c; 2 of No. 125; 2 of No. 126; 2 of No. 126a; 1 of No. 173a; 1 of No. 188; 1 of No. 189; 4 of No. 190; 2 of No. 191; 4 of No. 192.

MODEL OF THE MONTH

Adding Machine

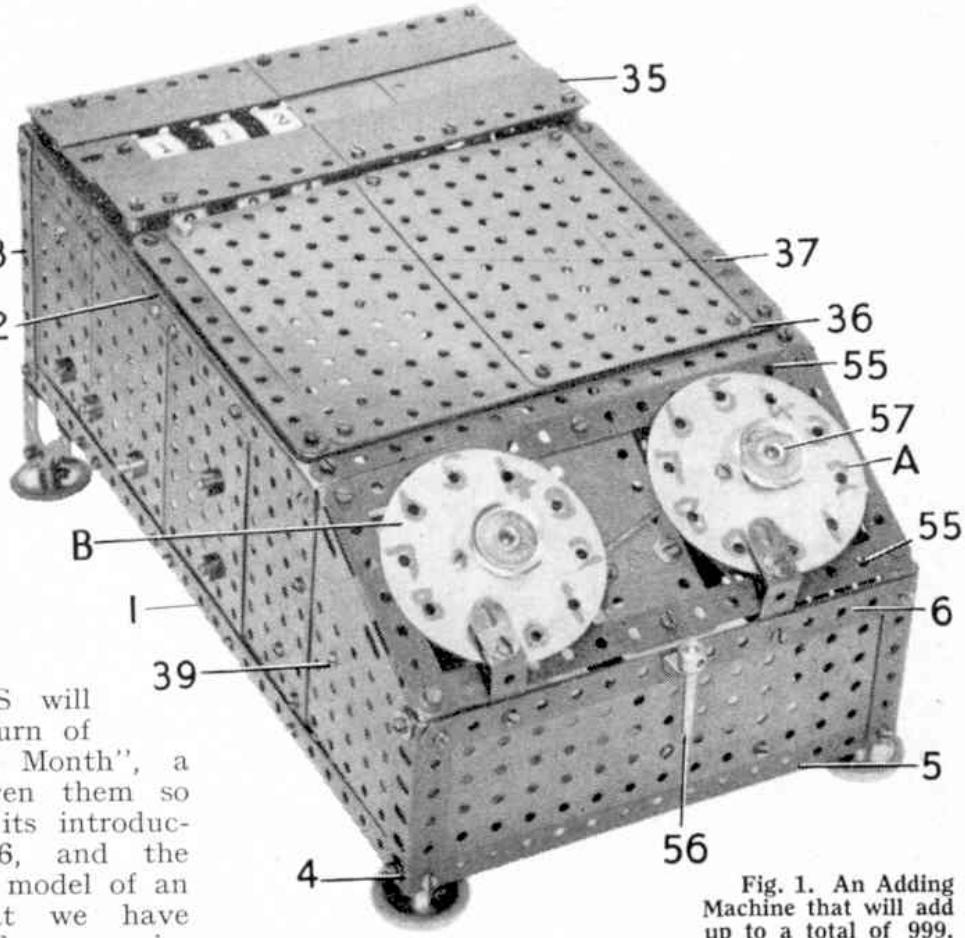

Fig. 1. An Adding Machine that will add up to a total of 999.

MODEL-BUILDERS will welcome the return of the "Model of the Month", a feature that has given them so much pleasure since its introduction in March 1956, and the splendid and unusual model of an adding machine that we have chosen as the first of the new series will be of outstanding interest. This is fully illustrated in the accompanying pictures.

As usual, constructional details for building the model, together with a list of the parts required are available for readers, free of charge apart from postage. To get them just write to the Editor, *Meccano Magazine*, Binns Road, Liverpool 13, enclosing a 2d. stamp. Readers living in

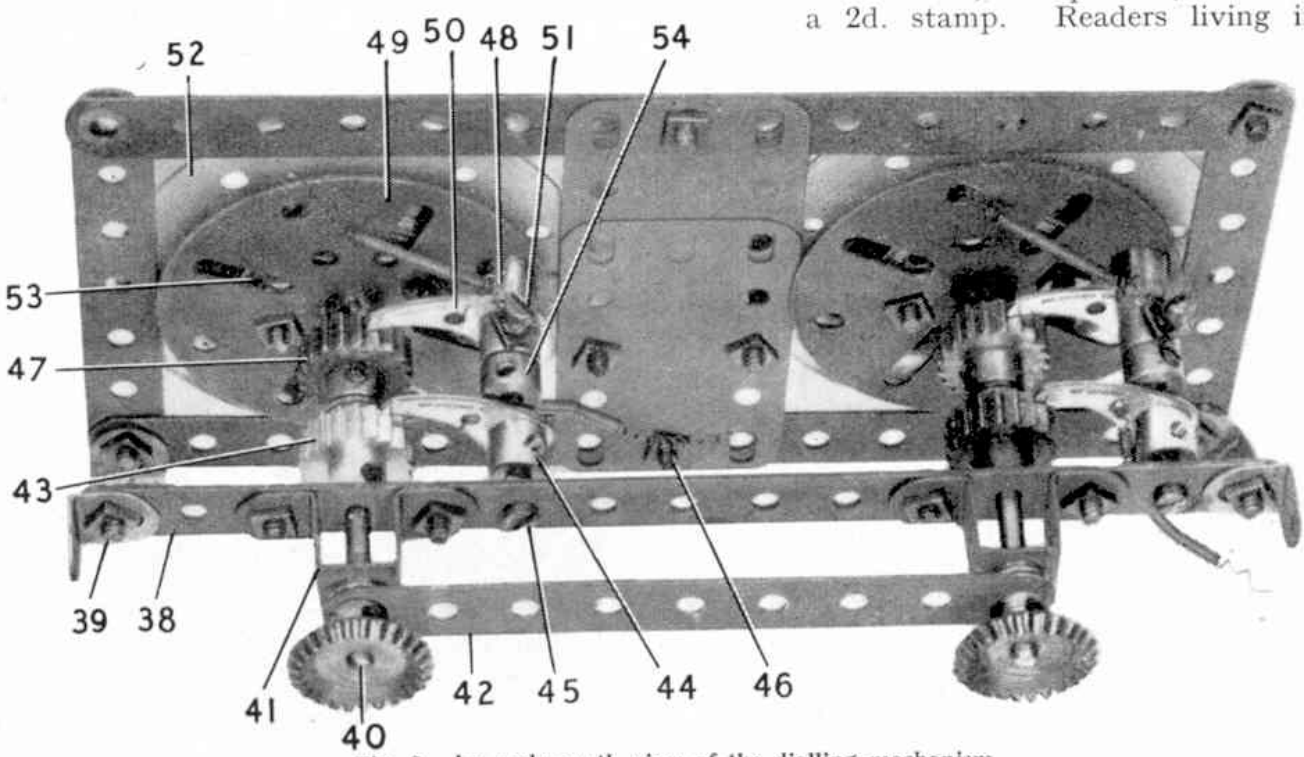

Fig. 2. An underneath view of the dialling mechanism.

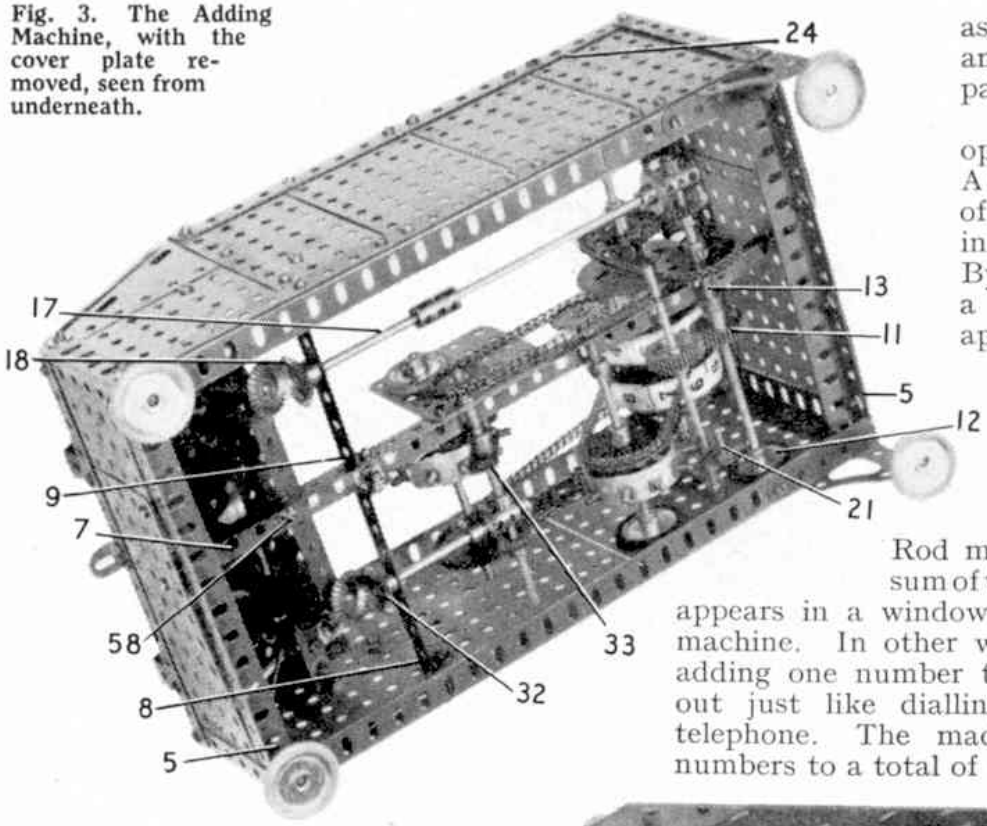

Fig. 3. The Adding Machine, with the cover plate removed, seen from underneath.

assortment of gears and other mechanical parts.

The machine has two operating dials, marked A and B in Fig. 1. Each of these has ten holes in it, numbered 0 to 9. By placing the end of a short Rod in the appropriate hole, first in the right-hand dial, and then in the left-hand one, and in each case pulling the dials around until the Rod meets a dial stop, the sum of the numbers "dialled" appears in a window at the head of the machine. In other words, the process of adding one number to another is carried out just like dialling on an automatic telephone. The machine will add any numbers to a total of 999.

Canada, Australia, New Zealand, South Africa, Ceylon, Italy, Rhodesia and the United States of America, should write to our main agents in those countries for their copies of the current Model of the Month instructions, also, of course, enclosing suitable stamps for postage. Write at once and make sure of your copies.

For the information of new readers, the Model of the Month series deals with models of a more advanced and elaborate type. Several large sectional illustrations are needed to show their construction clearly, and as the space available does not permit us to include both illustrations and constructional details of the model, the latter are published separately.

The Adding Machine that forms the subject for this month's model represents a very interesting aspect of model-building and should appeal strongly to those model-builders who possess a good

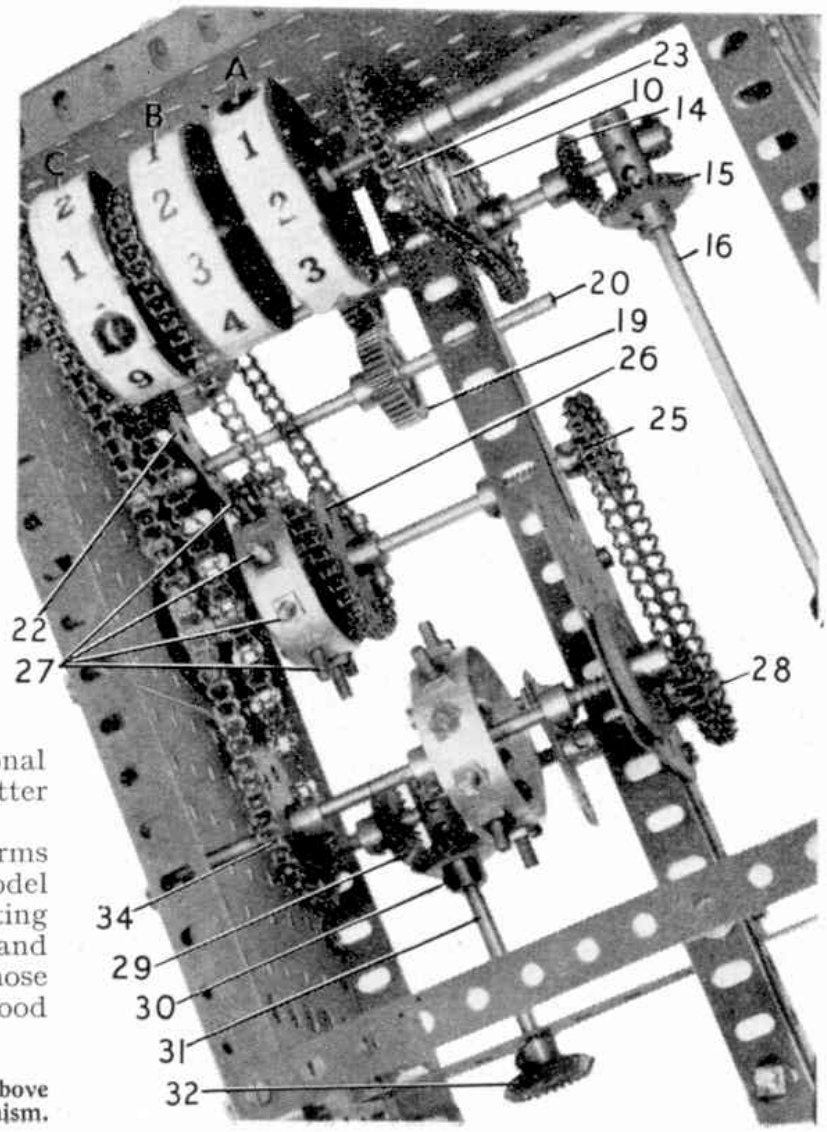

Fig. 4. The Adding Machine seen from above after removal of the dialling mechanism.

MODEL OF THE MONTH

ADDING MACHINE

Illustrated in the Meccano Magazine, 1958. (November)

The Casing

Build two similar sides, each consisting of one 12½" (1) one 9½" (2), one 4½" (3), and one 3" Angle Girder, filled in with five 4½" x 2½" Flat Plates, and a 3" x 2" Flexible Triangular Plate. The two sides are then joined together with three 7½" Angle Girders 5, and a 7½" Strip 6. 4½" x 2½" Flat Plates fill in the back, whilst two 5½" x 2½" Flat Plates are bolted to the front. Bolt a 12½" Angle Girder 7 to the end Flat Plates by Angle Brackets and two 3½" x ½" Double Angle Strips 8 and 9 to the Angle Girder and side Plates. Four 1" Pulley Wheels with Rubber Rings, are attached to the base with ⅜" Bolts and Flanged Brackets.

The Adding Mechanism.

On a 6½" Rod secure a 1½" Sprocket Wheel 10, a 1" Gear Wheel 11 and a 1" Pulley Wheel with Rubber Ring 12. The Rubber Ring should press lightly against the Flat Plate, with a Compression Spring and Collar 13, acting as a brake. A Bevel Wheel 14 drives another Bevel Wheel 15 mounted on a 5" Rod 16 coupled to a 2½" Rod 17 on which is secured a Bevel Wheel 18. The 1" Gear Wheel 11 drives a similar Wheel 19 on a 5" Rod 20. Fasten a Threaded Pin 21 in the elongated hole of a Double Arm Crank secured to Rod 20.

On the rims of three Boiler Ends marked "A", "B", and "C" in the illustrations, stick a 6½" x ½" strip of white paper, marked into ten equal divisions, each approx. 6/10" in length. Obtain from an old calendar the numbers 0 to 10, and stick one in each space. Cover with a length of transparent cellotape.

Two ¾" Bolts, with three Nuts hold each Boiler End to a 1½" Sprocket Wheel one of which is seen at 23 placed loosely on an 8" Rod 24, Collars being used to keep it in position. The Sprocket Wheels 10 and 23 are connected by a Chain.

Two more Boiler Ends are treated similarly, and placed on Rod 24, and spaced apart with Collars. It should be noted that the numbers on Boiler End "C" run the opposite way to those on Boiler Ends "A" and "B". The next thing is to build up two units as follows:- Take a 5½" Strip and bend it into a circle overlapping the ends one hole, around a 1½" diameter broom handle. At the joint and also diagonally opposite, a ½" Bolt with a Washer secures an Angle Bracket, to which is bolted a Bush Wheel. In the remaining holes in the Strip, six ⅜" Bolts are placed, with the edges of the Nuts square with the edges of the Strip. Place one of these units on a 5" Rod 25, together with a 1½" Sprocket Wheel 26, a 1" Pulley

with Rubber Ring, a Compression Spring and Collar. Connect the Sprocket Wheel 26 to the Sprocket Wheel on Boiler End "B" which must be set so that the Threaded Pin 21 strikes one of the Bolts 27 as the number from 9 to 0 is changing on Boiler End "A". A 1" Sprocket Wheel is fixed on a 5" Rod 28, on which is also fastened a Double Arm Crank 33 fitted with a Threaded Pin, and a Bevel Wheel 29. A Bevel Wheel 30 on a 2½" Rod 31 engages with Bevel Wheel 29.

The intermittent drive from the Double Arm Crank 33 to the built-up unit is similar to the drive on shaft 20 and 25. The 1½" Sprocket Wheel 34 is connected by Sprocket Chain with the Sprocket of Boiler End "C".

The Operating Dial Units

A 7½" Strip 38 is attached to the sides of the casing by Angle Brackets and ¾" Bolts 39 on each side. Two Double Bent Strips are bolted to the 7½" Strip 38 and a ½" Bolt 58 holds a 4½" Strip 42.

The operating dials are similar to each other so that a description of one of them will suffice. Each is constructed by securing a Bevel Wheel to a 3½" Rod 40, placed through the Double Bent Strip 41, the 4½" Strip 42 and two Washers. A Ratchet Wheel 43 is fixed to the Rod. A Pawl 44 is pivoted on a ¾" Bolt 45 and a piece of Spring Cord keeps it engaged with the Ratchet Wheel. Another Ratchet Wheel 47 is fastened in position, four Washers being used to space it from the Ratchet Wheel 43. A disc. 3" diameter, cut from stout cardboard or sheet tin has ten equi-distant 3/16" holes pierced in it 1¼" from the centre, and two holes ½" from the centre, diagonally opposite. The centre hole is ⅜" diameter.

The disc 52 is bolted to the Face Plate 49 with the 1½" Pulley 53 between them, care being taken not to damage the elastic band with the rim of the Pulley Wheel. To the 1½" Pulley Wheel, tie a piece of thin elastic (A Driving Band will do) through one of its outside holes, nearest the centre of the machine, to the 1½" Pulley Wheel on the other dial. The rubber band should keep in the groove when the dial is turned, and pull it back to the stop bolt 45. Bolt an Adaptor for Screwed Rod 48 to a Face Plate 49. Fix a Pawl 50 in position with a Collar. A nut and bolt 51 has a piece of Spring Cord attached, the other end being anchored to the Face Plate.

The number "0" on the dial should be arranged to be in the front centre position when the Collar 54 is against the stop bolt 45. The Face Plate is free on the shaft 40, the Pawl 50 transmitting the movement to the shaft. The Pawl 50 should move two teeth over the Ratchet Wheel 47 for every single number movement of the dial (e.g. over four teeth when number 2

is dialled and over 14 teeth when number 7 is dialled) The Pawl 44 locks the Ratchet Wheel 43 immediately behind the tooth.

A frame formed by 7½" Strips 55 and two 3½" Strips is attached to the main casing with Obtuse Angle Brackets. Two 2½" x 1½" Flexible Plates are joined together across the Strips 55. Dial Stops, each consisting of a Fishplate bolted to a 1" x ½" Angle Bracket are attached to the 7½" Strip 6.

Dialling is done by placing the end of a short Rod in the appropriate numbered hole in the dials and pulling the dial around until the rod hits the dial stop, just like dialling on an automatic telephone.

A 1½" Rod fitted with a Collar for a knob, makes a suitable dialling tone and can be kept in a holder at the front of the machine as shown at 56 in the general view illustration of the model.

A 1" Pulley Wheel 57, fixed to Rod 40 can be used to turn the Boiler End "A" back to zero. NOTE. Should the Boiler End "A" be in 8, 9, 0, position the dial operating Boiler End "B" must not be turned. For example, if the number 138 is registered on the Boiler Ends and 26 is required to be added on, the 6 must be dialled first on "A", followed by the 2 on "B".

The Casing Covers.

A cover Plate 35 (see general view illustration) is built by bolting two pairs of Windmill Sails to two 7½" Strips. These are joined together with two 3½" x 2½" Flexible Plates and a 3½" Flat Girder. Four Collars space the cover from the 9½" Angle Girders 2 of the Casing.

A rectangle frame is made from two 7½" Strips 36 and two 5½" Strips 37, using ⅜" Bolts. Two 5½" x 3½" Flat Plates are bolted between the Strips 36 to form a detachable cover plate.

Parts required to build the Adding Machine.

9	of	No.	1b	9	of	No.	22	2 of No. 96
4	"	"	2	2	"	"	24	1 " " 103d
1	"	"	2a	8	"	"	30	2 " " 109
2	"	"	3	2	"	"	31	4 " " 111
3	"	"	8	154	"	"	37a	7 " " 111a
2	"	"	8a	111	"	"	37b	34 " " 111c
3	"	"	8b	46	"	"	38	2 " " 115
2	"	"	9a	2	"	"	45	3 " " 120b
2	"	"	9c	2	"	"	48b	1 " " 139a
2	"	"	10	2	"	"	52a	1 " " 139b
12	"	"	12	13	"	"	53a	4 " " 147a
2	"	"	12b	6	"	"	58	4 " " 148
4	"	"	12c	24	"	"	59	7 " " 155
1	"	"	13a	4	"	"	61	3 " " 162a
1	"	"	14	2	"	"	62b	2 " " 173a
5	"	"	15	3	"	"	63	2 " " 188
2	"	"	16	2	"	"	70	2 " " 190a
2	"	"	16a	1	"	"	72	2 " " 225
1	"	"	18a	2	"	"	94	1 E20R(S) Motor
2	"	"	21	6	"	"	95a	1 Length of Elastic

Two tin or cardboard discs.

Build Mum and Dad a fine new house this Christmas . . .

WITH MINIBRIX!

and right through the year you will get hours of enjoyment building castles and cottages, farmhouses and factories, schools and stations, also hundreds of other fine models with MINIBRIX—the all-rubber interlocking bricks.

- HYGIENIC AND SAFE
- HARMLESS TO FURNITURE
- UNBREAKABLE
- ALMOST EVERLASTING

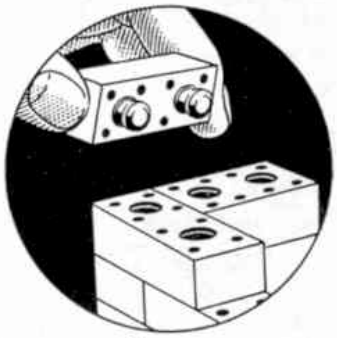

Famous Interlocking Device

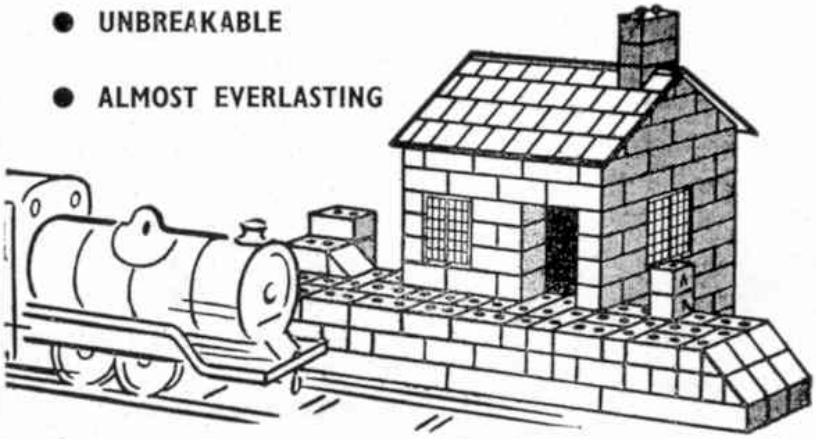

MINIBRIX

REGISTERED TRADE MARK

Obtainable at all leading stores and toy shops

MINIBRIX LIMITED • PETERSFIELD • HANTS

MB2

A British Moon Rocket Plan

By the Editor

LOOKING back, it is astonishing to see how rapidly we appear to have plunged into the rocket age. Since the war rockets to make high flights over long distances have been developed, chiefly as weapons to be used in war. This was spectacular enough as the range and deadly character of the rockets were increased, but the climax came in October of last year when the Russians actually shot a miniature satellite into space. The Americans were spurred on by this to speed up the efforts they had begun to send a satellite circling round the Earth, and in the end they too succeeded. Both they and the Russians have achieved other successes and all at once everybody throughout the civilised world realised how far rocket science had been carried—and wondered what was still to come.

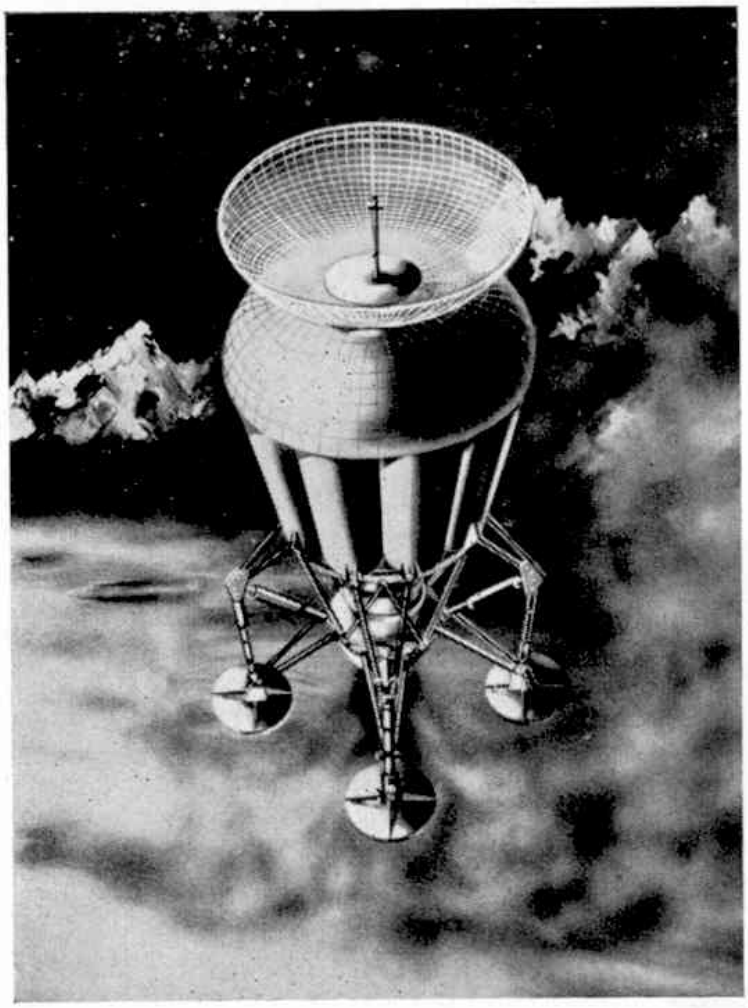

A design for a Moon rocket for landing on the Earth's satellite prepared by engineer members of The British Interplanetary Society. A drawing showing its parts appears at the head of the opposite page.

These fantastic developments were not the result of sudden thoughts and sudden efforts. Scientists indeed had been working for years to improve rockets, and to make them capable of carrying greater masses into the upper regions of the atmosphere, not just with warlike purposes in mind but also to allow for scientific exploration of the higher regions of the atmosphere, and indeed of space itself. For instance, the first aim of those designing Earth satellites, and the means of setting them on the paths round the Earth that we call their orbits, was to learn as much as we could about our atmosphere.

Many things have already been discovered, some of them surprising. One of these was the discovery that at great heights the atmosphere was denser than had been previously thought. A special purpose was to learn something of the nature and the radiation from outer space. It has been known for a considerable time that "rays" from outer space reached us. These consist really of showers of sub-atomic particles. Only a small proportion reach the surface of the Earth, and to gain further knowledge of their character stations were set up on mountains, where more abundant evidence of their existence was soon discovered.

Satellites ascend to far greater heights than those of mountains, of course, and it has already been made apparent that at these heights the radiation is far more intense than had been thought. Indeed it may be a barrier to space travel, for intensive radiation of the kind known to exist would exert evil effects on human beings who ventured into space and might be harmful in other ways.

This difficulty of course may be overcome. One interesting suggestion is that space rockets might be sent up a kind of corridor or vertical tunnel free of radiation that stretches upward over the magnetic pole,

The particles from outer space are affected by magnets, and the magnetic field of the Earth diverts them along lines that in a general way may be compared with the magnetic lines of force of an earthly magnet. (Many of you will have traced these lines of course by scattering iron filings over a sheet of thin card, and tapping the latter so as to cause the filings to jump slightly from the card.) If this proves practicable, then rockets intended for outer space would be shot out from the neighbourhood of the North Magnetic Pole, which is in Arctic Canada, or of course from that of the South Magnetic Pole.

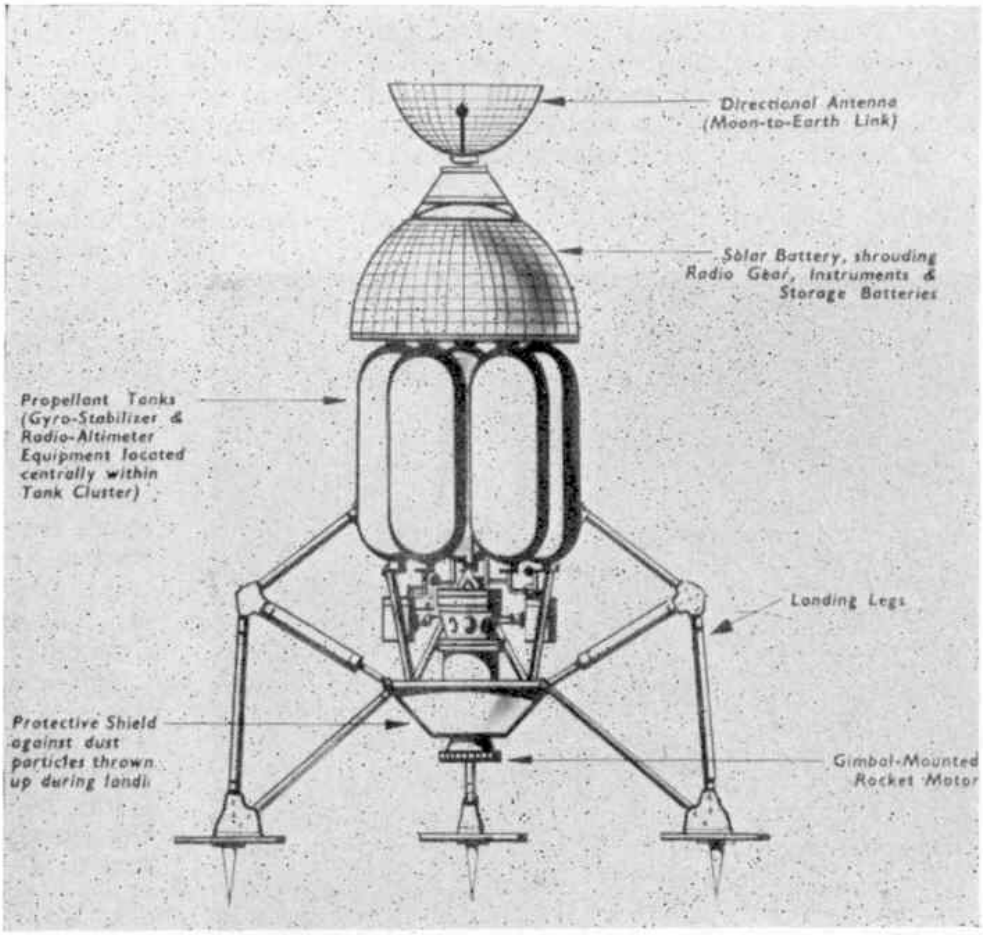

The first step outward into space would obviously take us to the Moon. Earlier in this article I wrote that investigation into rockets and their possible use in exploring space has been in progress for a considerable time. In fact, it is several years since a journey to the Moon began to be thought possible and during the last dozen years or so much fiction has been written on space travel, all very interesting and thought provoking, but not in any way technical. Some of them have even suggested that in time we may be able to travel right out of the solar system itself and to land on suitable stars or their planets, many many millions of miles away.

Whether space fiction of this kind is a pointer to the future or not remains to be seen, but the time does seem to be approaching when a flight

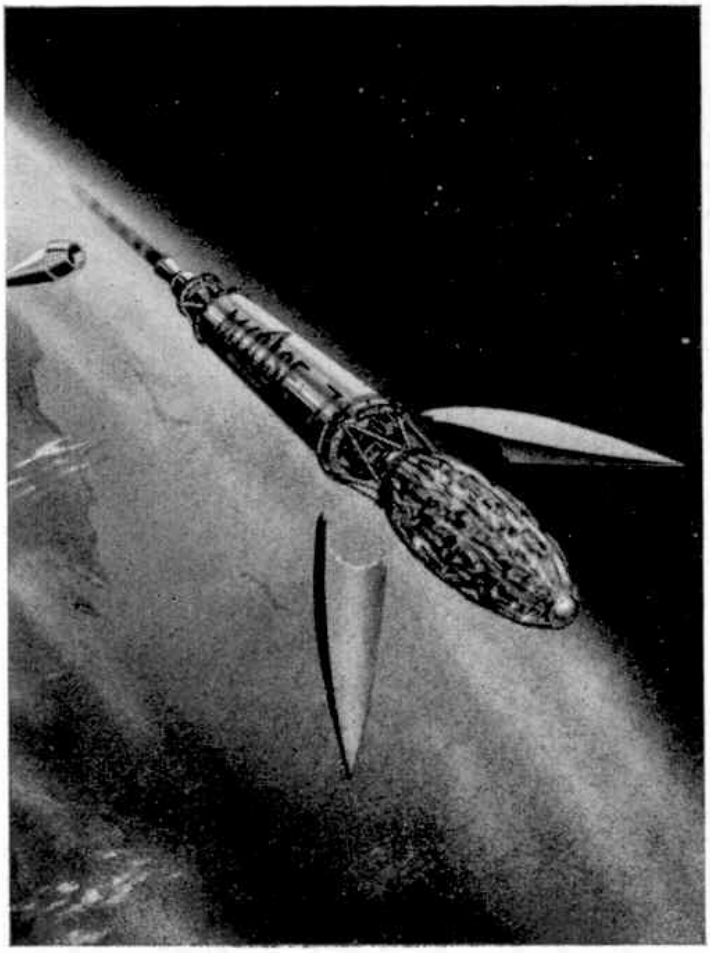

An artist's impression of the third stage of a rocket designed by British engineers to eject into orbit an inflatable metal foil satellite with a diameter of 6 ft. to 8 ft. Here the satellite is just beginning to be inflated.

to the Moon will be possible. Most of you will have seen accounts in newspapers of plans that have been made in the United States for sending up a rocket carrying a small vehicle, similar perhaps to the Earth satellites with which we are becoming familiar, that will travel out to the Moon, encircle it and even return. A successful effort indeed may have been made before this issue of the *M.M.* appears. Even if it does not return to Earth, the instruments that such a vehicle would carry would give us a considerable amount of information of the greatest possible interest about our Moon.

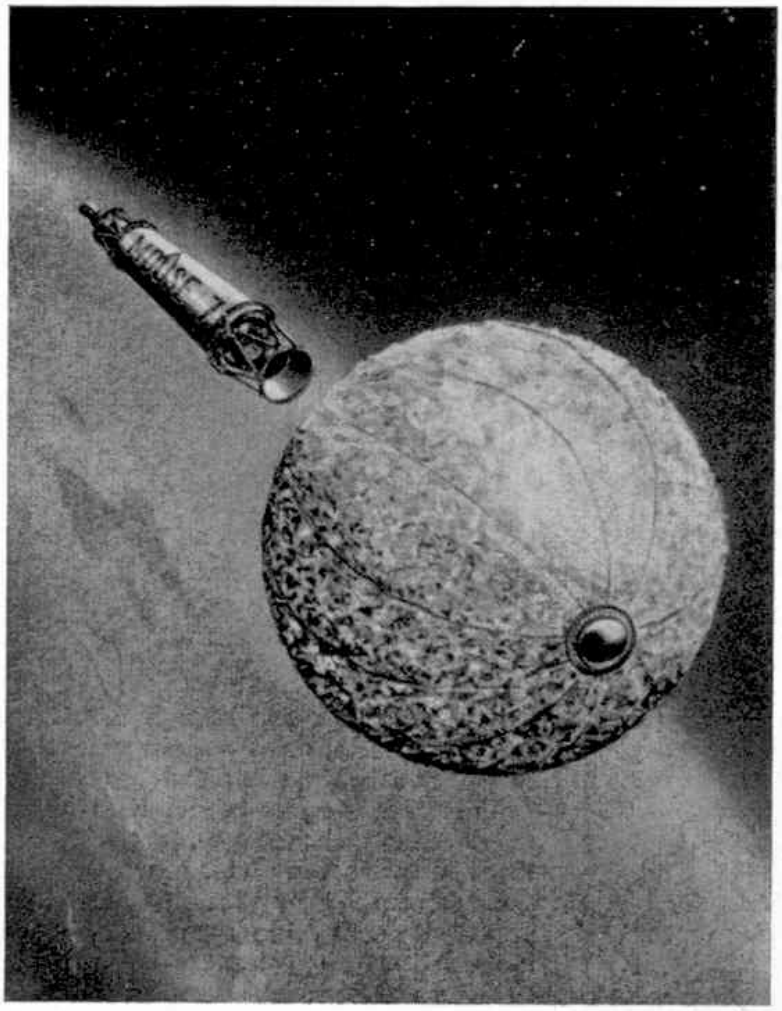

The metal foil satellite fully inflated after ejection by the third stage rocket. For the illustrations to this article I am indebted to the courtesy of the British Interplanetary Society.

Now it will perhaps be a surprise to many of you to learn that plans not only for doing this, but for actually landing a vehicle on the Moon, have been made by British scientists. Members of the British Interplanetary Society, the pioneer astronautical body in this country, have been studying such schemes for twenty-five years. British engineers indeed were quicker off the mark than those of other countries in this activity, although their ideas could not at the time be translated into practice, and as yet there are no British satellites—as there should be.

As long ago as 1951 three members of the Society produced a design study for a 16-ton rocket, similar in many ways to those used by the Americans and Russians, to lift into orbit round the Earth a small vehicle with a load of instruments, or a metal foil satellite that would be inflated, like a balloon, when it reached its orbit. It is interesting to recall this now that the United States Army have decided to use a Jupiter C rocket to place an inflated satellite 12 ft. in diameter into the orbit.

It has also been suggested, in America, that a man can be sent into space, to return in a capsule that is to come down to Earth by parachute. No doubt the Russians have similar ideas and it already seems clear that there will be no lack of volunteers for this perilous voyage through the upper atmosphere.

A somewhat similar scheme was suggested as long ago as 1947 by R. A. Smith and H. E. Ross, Council members of the British Interplanetary Society. The rocket was to be an enlarged version of V2, the German rocket that was used for a short time towards the end of the second World War, which would have a pressurised cabin that would be separated from the rocket on reaching the highest point attainable. The rocket was to be 57 ft. long and to have weighed 21 tons at take-off.

More recently an even more fascinating study has been made by K. W. Gatland, Vice-Chairman of the British Interplanetary Society. The result of his efforts was the design of the British "MIGRANT" rocket, which is illustrated on pages 462 and 463. Its name was contrived from the initial letters of "Moon, Instrument Guided-Rocket and Notifying Transmitter", a name that sums up the aims of the designer. The vehicles he considered ranged from rockets for carrying instruments and cameras around the Moon to robot Moon-landing vehicles capable (Cont. on page 504)