Meccano Roulette	42
Meccano Launch	43
Track Formations	44
Meccano Dealers	46
Hornby 'O'	47
Dinky Toys' News	48
Track Cleaning Wagon and Index	52

MECCANO

DINKY TOYS · HORNBY DUBLO & GAUGE 'O'

1905 ROLLS-ROYCE IN MECCANO

MORE than two years ago, we published details of a huge Veteran Motor Car which subsequently proved enormously popular with builders. Since then, I have received countless requests for another model on the same lines. Here, I bow to those requests and give full building instructions for another 'giant' veteran based on the 1905 Rolls-Royce. Motive power is supplied by an E15R Electric Motor that drives the rear wheels via a clutch, gearbox and differential.

Because of the size of the model, construction is fairly complicated and so it is best, I think, to give the instructions under specific headings.

Chassis and steering gear

The main framework consists of two 18½ in. Angle Girders 1 and 2 joined together by two 5½ in. Angle Girders 3 and 4. Both Angle Girders 1 and 2 are extended by a pair of 4 in. Curved Strips 5 and 6, protruding 2 in., the two inside Strips being attached by Angle Brackets. A 3 in. Formed Slotted Strip 7 is bolted to a Double Bracket secured to the forward ends of each pair of Curved Strips. Suspension springs 8 are built-up from a 5½ in., a 4½ in., a 3½ in. and 2½ in. Strip, bent to shape, the 5½ in. Strip having a Double Bracket fixed at its ends. The front Double Brackets are bolted to the Double Brackets at the end of Curved Strips 5 and 6, while the rear Double Brackets are attached to Fishplates by ¾ in. Bolts. The Fishplates are then connected to the Angle Girders, one direct and one by means of an Angle Bracket.

Two 5½ in Strips 9, overlapped seven holes, and with Cranks 10 at each end, are fastened to the suspension springs. A 1½ in. Corner Bracket 11 is bolted to a 1½ in. Angle Girder which, in turn, is bolted to a 1½ in. Flat Girder 12 attached to the

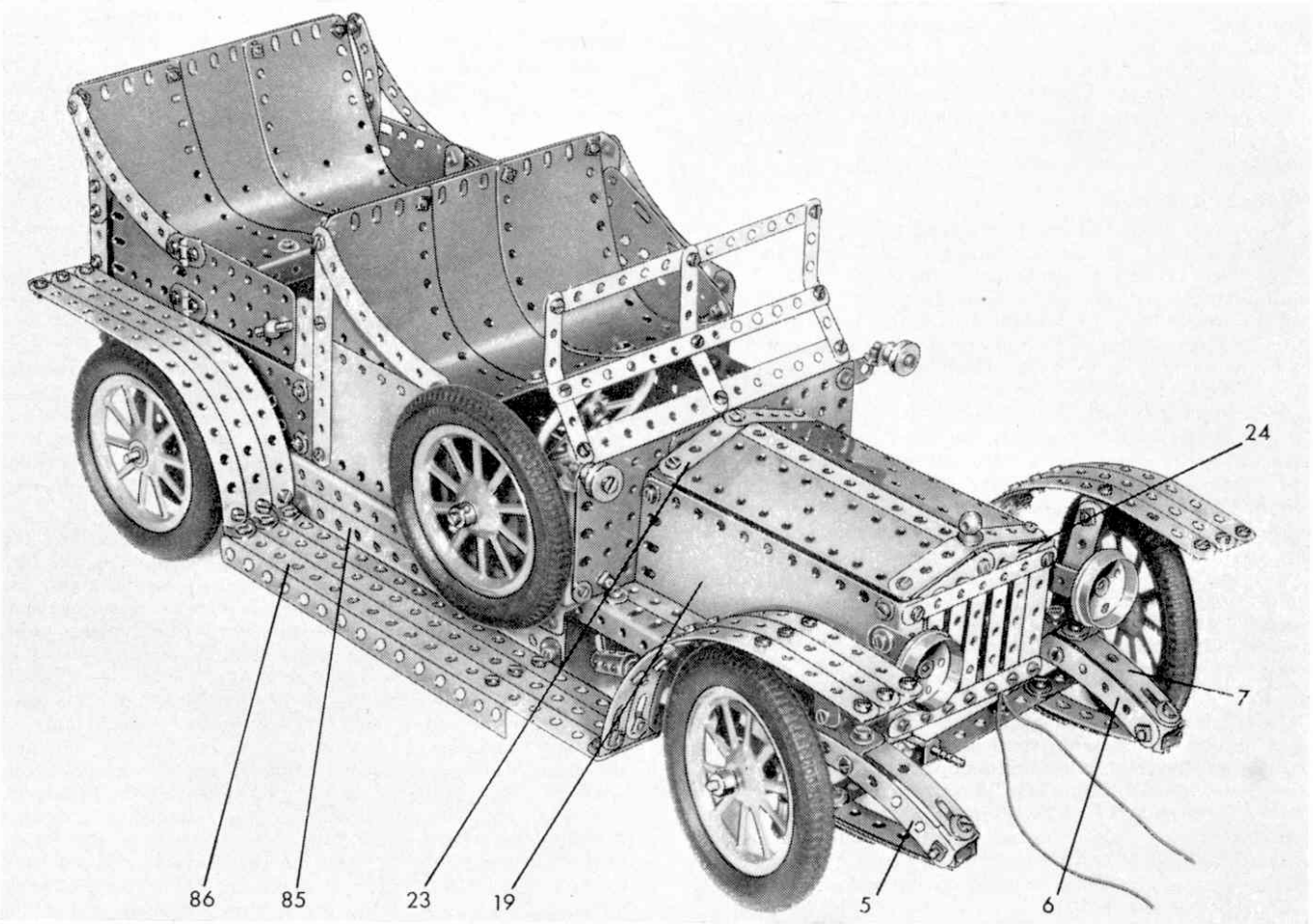

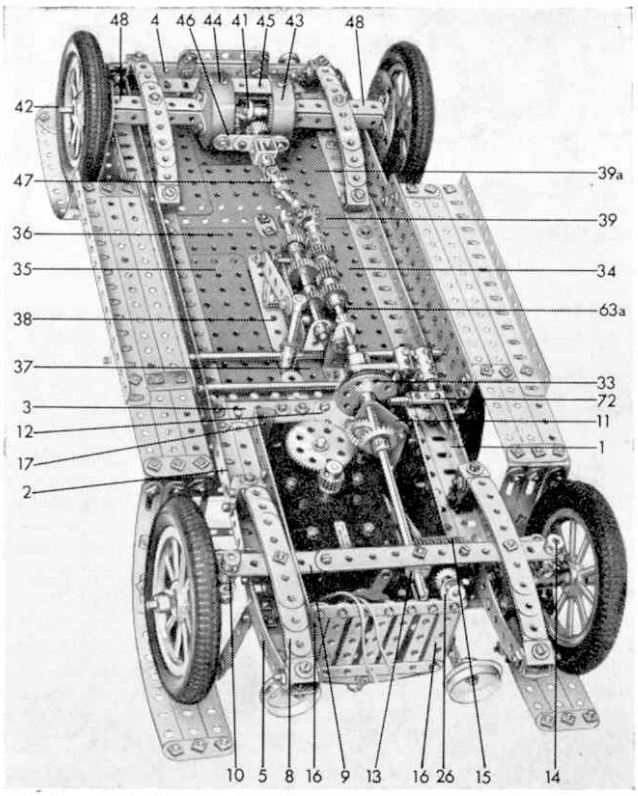

An underside view showing transmission, gearbox and axles

Angle Girder 3. An Angle Bracket 13 is fixed to the Strips 9, then a 1½ in. Rod 14, carrying a Coupling and a Short Coupling secured at right angles to each other, is positioned and held in place by a Collar. Spoked Wheels are mounted freely on 1½ in. Rods fixed in the Short Couplings, and are held in place by Collars. The two Couplings are connected by a 6½ in. Rod carrying two Worms 15 and two Small Fork Pieces, one at each end. The Small Fork Pieces are loosely attached to the Couplings by ½ in. Bolts, held by the Grub Screws.

Motor and Bonnet

Two 2½ in. Angle Girders 16 are fixed to 1 in. by ½ in. Angle Brackets bolted to the Angle Girders 1 and 2, while two more 2½ in. Angle Girders 17 are bolted to the Angle Girder 3. The Motor flanges are secured to 5½ in. Strips 18 and a 5½ in. by 2½ in. Flexible Plate 19, all bolted to the 2½ in. Angle Girders 16 and 17 at one side. The opposite side of the bonnet is filled in by another 5½ in. by 2½ in. Flexible Plate. Two 4½ in. by 2½ in. Flat Plates 20, overlapped six holes, and with a 2½ in. Angle Girder 21 attached to each end, are bolted to the Angle Girders 3 and 17. The bonnet top consists of two 5½ in. by 1½ in. Flexible Plates and a 5½ in. Strip, held together by a 3½ in. Strip 22 and two 2 in. Strips 23. Obtuse Angle Brackets are used to attach the bonnet top to the bonnet sides, while an Angle Bracket in the centre of the 2 in. Strips holds the bonnet fast to the Flat Plates 20. The radiator is represented by five 2½ in. Narrow Strips bolted to two 3½ in. Narrow Strips which, in turn, are bolted to Angle Girders 16. Two 2 in. Strips 24 are fastened to the bonnet by an Angle Bracket held by a Handrail Support.

An 8 in. Rod 25, on which is mounted a Steering Wheel and a ½ in. Pinion, is journalled in the Flat Plates 20 and an Obtuse Angle Bracket 26, a Collar holding it in position. A $\frac{7}{16}$ in. Pinion on the motor shaft drives a 60-tooth Gear Wheel on a 2½ in. Rod 27 that has on its uppermost end another $\frac{7}{16}$ in. Pinion driving 60 teeth Gear Wheel 28 on a 3 in. Rod 29. On the lower end of Rod 29 a ⅞ in. Bevel Wheel 30 is mounted and this engages with a further ⅞ in. Bevel Wheel 31 secured on a 5½ in. Rod 32. An 8-hole Bush Wheel 33, forming the driving part of the clutch is fixed on the end of the Rod 32.

Four Flat Plates, a 5½ in. by 3½ in. 34, a 5½ in. by 2½ in. 35, a 3 in. by 1½ in. 36, and a 1½ in. by 1½ in. 37, are bolted to each other and to the chassis followed by a 3½ in. Strip 38 and a 1½ in. Strip to complete the front part of the floor. The rear part is built from two 4½ in. by 2½ in. Flat Plates 39, and three 5½ in. by 1½ in. Flexible Plates 39a.

Differential and rear axle

A 1½ in. Rod that carries a Collar at each end, is fitted in the transverse bore of a Coupling. The Collars are held in place by 1 in. Screwed Rods through their transverse tapped bores, the Rods also serving to secure the Couplings to a 1½ in. Contrate Wheel 40. Between the Coupling and the Contrate Wheel 40, a ¾ in. Contrate Wheel 41 is fitted, three Washers being used for spacing purposes. A 5 in. Rod on which the last-mentioned Contrate Wheel is mounted forms one side of the back axle, the opposite side of which consists of a 4½ in. Rod 42 which carries a further ¾ in. Contrate Wheel. This Contrate Wheel and Contrate Wheel 41 are in constant mesh with two ¾ in. Pinions freely mounted on Pivot Bolts secured in the Coupling.

The 5 in. Rod is now fitted with a Boiler End 43, spaced away from the Contrate Wheel 40 by six Washers. In a similar way the Boiler End 44 is fitted, two Washers being used to space this from the ¾ in. Contrate. Three 2 in. Strips, one of which is shown at 45, are bolted between the Boiler Ends, on the inside. A fourth 2 in. Strip 46 is fixed to the outside edges by ⅜ in. Bolts, two spacing Washers on each shank. A Double Bent Strip is bolted to the 2 in. Strip, a Washer being placed under the head of the ⅜ in. Bolt, then a 1½ in. Rod, carrying a ½ in. Pinion and a Universal Coupling 47, is mounted in it. Four 2½ in. by ½ in. Double Angle Strips 48 are bolted to each Boiler End to represent half-shaft casings, and to these the rear suspension springs, constructed in a similar manner to the front springs, are attached by ⅜ in. Bolts. This done, a Face Plate is bolted in the same way as is the front axle. Spoked Wheels with 3 in. Tyres are fastened on to the axles, as shown.

Gearbox

The end of a 4 in. Rod with Key-Way 49, on which is mounted a ¾ in. Pinion 50 and a ½ in. Pinion 51, is inserted in the bore of a ½ in. Pinion 52 that is carried on a separate Rod 53 from which the Universal Coupling 54 is connected to the rear axle by a 1 in. Rod 55. Rod 53 carries also a ¾ in. Pinion 56 and a Collar. The sliding layshaft is a 4½ in. Rod on which are a ½ in. Pinion 57, a ¾ in. Pinion 58, and a ½ in. Pinion 59. A ½ in. Pinion 60 is carried on a ¾ in. Bolt screwed into the transverse bore of a Threaded Boss, and is locked by means of a Grub Screw screwed into the opposite end of the bore. The Threaded Boss is rigidly attached to a 3 in. Angle Girder 60a by a ½ in. Bolt 61, but is spaced from it by a Collar and two Washers. The movement of the sliding shaft is controlled by a ¾ in. Bolt 62, the head of which fits between the bosses of the Pinions 58 and 59. Bolt 62 is fixed in a Crank by a Nut on each side of the Crank, while a 2½ in. Strip 63 is pivotally held by two Nuts locked together. The Crank is secured to a 2 in. Rod journalled in two 1 in. Triangular Plates, one bolted to 3 in. Angle Girder 60a, and the other to another 3 in. Angle Girder 63a.

When ½ in. Pinion 51 is in mesh with Pinion 58, at the same time as ½ in. Pinion 59 is in mesh with Pinion 56, the first gear is obtained. By sliding the layshaft to the right, the Pinion 59 disengages, but Pinion 58 remains in engagement with its ½ in. Pinion and, at the same time, meshes with Pinion 52. This gives a straight through drive resulting in second gear. Further movement of the sliding Rod brings into engagement Pinions 50 and 57, and 58 and 52, thus providing two step-up stages for top gear. Reverse gear is obtained when the rod is slid over to the extreme left, and the drive then goes through Pinions 50 and 60—which are in constant mesh—to Pinion 58, Pinion 59 engaging the Pinion 56.

A 1 in. pulley with Rubber Ring is fastened in a Socket Coupling 64 with a Key Bolt being screwed in the Pulley boss. This assembly is placed on the Rod 49 preceded by a Compression Spring 65 and a Collar 66. The Collar is adjusted so as to keep the Pulley firmly pressed against the

Bush Wheel 33. Rods 32 and 49 must be in perfect alignment. The gearbox is fixed to the car by means of two 1 in. by ½ in. Angle Brackets bolted to the 1 in. by 1 in. Angle Brackets 67 and the Flat Plate 34. An 8 in. Rod 68 is passed through the transverse bore of a Coupling, in which is fixed a 1½ in. Rod carrying a Collar, to which the 2½ in. Strip 61 is attached, and a 2 in. Rod 69, topped by a Handrail Coupling, forming the gear lever.

Brake and Clutch pedals

On an 8 in. Rod 71 two Couplings, each having a 1 in. and a 1½ in. Rod secured in them, are loosely mounted. Both 1 in. Rods have a Collar fixed at their upper ends and to each of these is fastened an Obtuse Angle Bracket by a nut and bolt to represent the pedal. A short Coupling, carrying a 1½ in. Rod that engages in the groove of the Socket Coupling, is mounted on the 1½ in. Rod in the left-hand Coupling. This actuates the clutch. Fixed on the 1½ in. Rod in the right-hand Coupling is another Coupling which supports a 1 in. Rod. Mounted on this 1 in. Rod is a third Coupling 72 also holding a 1 in. Rod that presses against the Bush Wheel when the brake pedal is depressed. Normally, however, Spring Cord keeps the Rod clear of the Bush Wheel.

Bodywork

A 3 in. Strip 73, a 3½ in. by 2½ in. Flexible Plate and a 4½ in. Angle Girder 74 are all secured to a 3½ in. Angle Girder bolted to the Angle Girders 75. The Strip and the Girder are joined together by a 4 in. Curved Strip 76 and a 3½ in. by 1½ in. Triangular Flexible Plate. Both sides are similar and are connected together by 6½ in. compound strips and Angle Brackets. The back of the front seat consists of three 4½ in. by 2½ in Flexible Plates while the seats themselves are made from three 5½ in. by 2½ in. Plastic Plates bolted to the compound strips. To finish the front seat, a 4 in. Curved Strip 77 and a 2½ in. by 1½ in. Flexible Plate are bolted to the Angle Girder 21 and the Strip 73. The spare wheel is mounted on

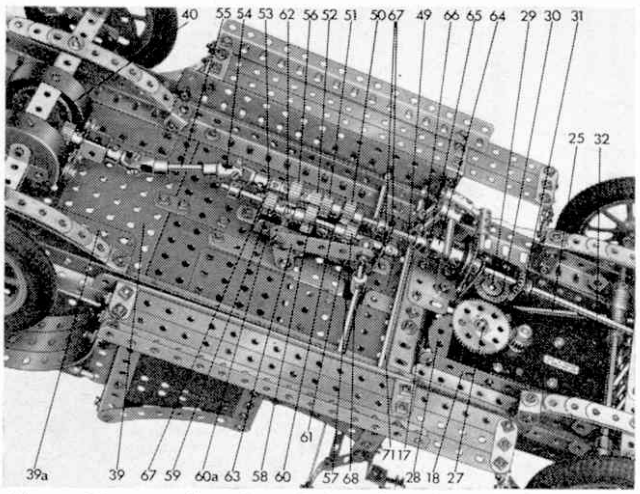

Above: Close-up of gearbox. Below: A working gear lever is fitted

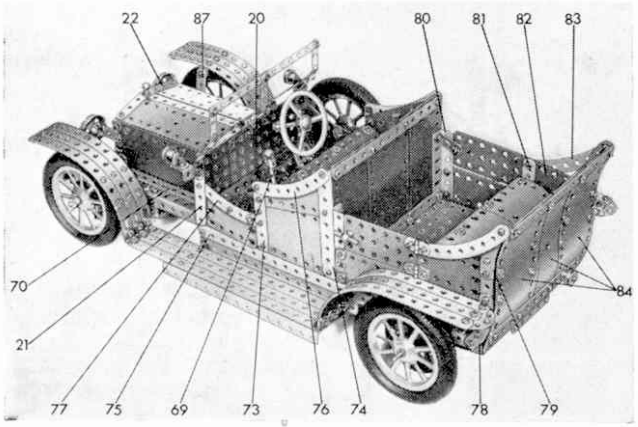

a 1⅛ in. Bolt attached by two Nuts to one of the 4 in. Curved Strips.

To the end of the Girder 75, a 2½ in. Curved Strip 78, that has been extended by a 2½ in. Strip and another 2½ in. Curved Strip 79, is bolted. Two 3 in. Angle Girders 80, bolted to the front seat-back, support a 5½ in. by 1½ in. Flexible Plate extended one hole by a 2½ in. by 1½ in. Flexible Plate fastened to the Curved Strip 78. A 3 in. Strip 81 supports a 2½ in. by 1½ in. Flexible Plate 82, a 4 in. Curved Strip 83, and the hinges for the doors which are 3 in. by 1½ in. Flat Plates.

A Handrail Support, carrying a 1 in. Rod in its transverse bore and with a Fishplate locked between two nuts on its shank, is mounted in each door to act as a handle. Three 5½ in. by 2½ in. Plastic Plates 84 are bolted to two 4½ in. Strips, overlapped five holes, at the top and bottom of the Plates. These are fastened to the Strips 79 by Angle Brackets. A further three similar Plates form the rear seat and are secured at the top by the same bolts as the Plates 84. The other ends are bolted to two 3½ in. Angle Girders overlapped one hole and attached to the sides by Angle Brackets. The front of the Angle Girders support a 5½ in. by 1½ in. and a 2½ in. by 1½ in. Flexible Plate overlapped three holes. Two 5½ in. Curved Strips, overlapped nine holes, are attached to the bottom of the Flexible Plates. The rear lamp, a ½ in. Pulley on a ¾ in. Bolt, and the number plate, a 2½ in. Narrow Strip attached by Fishplates, complete the back of the body. At the front, two 5½ in. Strips 70 are bolted between the Angle Girders 1 and 2 and the bonnet. The windscreen is built up from Narrow Strips of various lengths, as shown, and is attached to Flat Plates 20 by Obtuse Angle Brackets. ½ in. Pulleys with boss, attached to Angle Brackets, form the side-lamps, and they are fixed to Angle Girders 21 by right-hand and left-hand Corner Angle Brackets respectively. The headlamps are 1½ in. Flanged Wheels mounted on the bonnet with the help of 1 in. by ½ in. Angle Brackets.

Running Boards and Mudguards

A 7½ in. Flat Girder 85 is bolted to the Angle Girders 75, then three 9½ in. Strips 86 are placed side by side, secured to three 1½ in. Strips, and fastened to the Flat Girder by two 1 in. by ½ in. Angle Brackets. The rear mudguards each consist of three 7½ in. Strips, bent to shape and attached to the running board by Angle Brackets. A Wheel Disc, fixed to the car body by an Angle Bracket, adds the final touch. The front mudguards consist of three 5½ in. Strips extended by Formed Slotted Strips bolted to Angle Brackets attached to the running board. The mudguard stays 87 are 2 in. Strips secured to the mudguards and chassis by Angle Brackets and 1½ in. Strips.

Before the 3 in. Tyres can be fitted on to the Spoked Wheels it will be necessary to trim the inside 'V' down until a flat surface is obtained. I realise that, after this, the tyres can no longer be used with 3 in. Pulleys, but the overall effect Spoked Wheels have on the model makes trimming the tyres well worth it. **—Spanner**

Parts required: 6 of No. 1a; 1 of No. 1b; 17 of No. 2; 18 of No. 2a; 8 of No. 3; 4 of No. 4; 7 of No. 5; 10 of No. 6; 11 of No. 6a; 2 of No. 7a; 2 of No. 8; 2 of No. 8b; 2 of No. 9; 2 of No. 9a; 4 of No. 9b; 4 of No. 9c; 6 of No. 9d; 1 of No. 9f; 19 of No. 10; 10 of No. 11; 52 of No. 12; 4 of No. 12a; 11 of No. 12b; 6 of No. 12c; 1 of No. 13a; 3 of No. 14; 1 of No. 14a; 1 of No. 15; 2 of No. 15a; 1 of No. 16a; 1 of No. 16b; 2 of No. 17; 13 of No. 18a; 5 of No. 18b; 5 of No. 19a; 2 of No. 20; 1 of No. 22; 3 of No. 23a; 1 of No. 24; 2 of No. 24a; 5 of No. 25; 8 of No. 26; 2 of No. 26c; 2 of No. 27d; 1 of No. 28; 2 of No. 29; 2 of No. 30; 360 of No. 37a; 316 of No. 37b; 126 of No. 38; 1 of No. 45; 8 of No. 48a; 1 of No. 52a; 4 of No. 53a; 19 of No. 59; 3 of No. 62; 8 of No. 63; 3 of No. 63d; 1 of No. 64; 1 of No. 70; 3 of No. 73; 1 of No. 74; 2 of No. 77; 4 of No. 82; 2 of No. 89; 10 of No. 89b; 4 of No. 90; 1 of No. 103h; 2 of No. 103k; 2 of No. 109; 15 of No. 111; 5 of No. 111a; 8 of No. 111c; 1 of No. 111d; 4 of No. 114; 2 of No. 116a; 1 of No. 120b; 1 of No. 133; 3 of No. 136; 1 of No. 136a; 2 of No. 140; 5 of No. 142b; 2 of No. 147b; 1 of No. 154a; 1 of No. 154b; 1 of No. 155; 2 of No. 162a; 1 of No. 171; 1 of No. 185a; 7 of No. 188; 8 of No. 189; 2 of No. 190a; 3 of No. 191; 2 of No. 192; 9 of No. 193e; 8 of No. 215; 2 of No. 224; 1 of No. 230; 1 of No. 231; 6 of No. 235; 3 of No. 235a; 6 of No. 235b; 1 E15R Electric Motor.