Two Meccano "Old Timers"

The Wright Biplane and an Early Motor Car

AEROPLANES and motor cars are among the most popular subjects for model-building, and both include a very wide range of machines that lend themselves well to realistic reproduction. The model-builder particularly enjoys building models of modern cars or aeroplanes, but equally good fun can be obtained by reproducing old time examples, many of which are noteworthy for their quaint and unusual appearance as well as for their historical interest. The two models dealt with in this article are excellent instances of this. One of them is a reproduction of the biplane in which the Wright Brothers made the first controlled flights more than 30 years ago. The other represents one of the earliest motor cars to be used in this country.

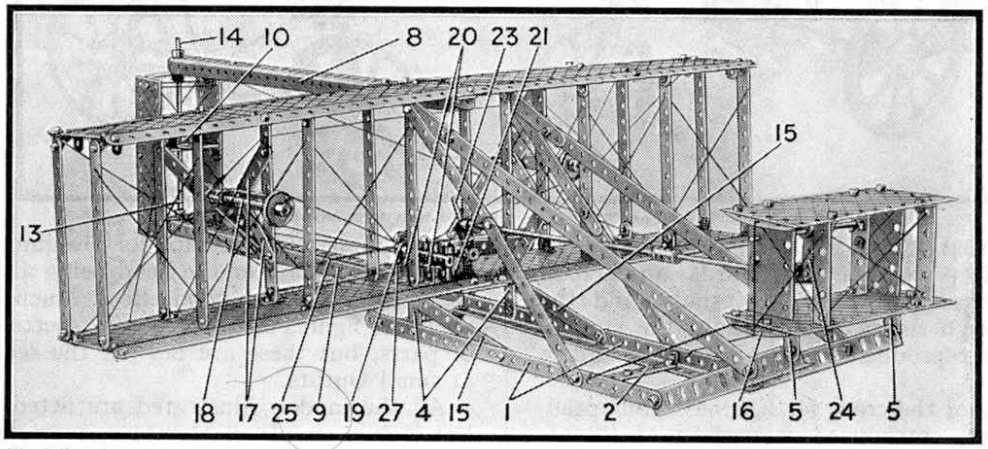

Fig. 1. A scale model of the Wright Biplane. The construction of this "old timer" is fully described in the accompanying article.

Construction of the model of the Wright Biplane is begun by building the simple fuselage of the machine. Two $12\frac{1}{2}''$ Angle Girders 1 are connected together by two $3\frac{1}{2}''$ cross members 2, each of which is built up from two $2\frac{1}{2}''$ Strips overlapping three holes, and two $1\frac{1}{2}'' \times \frac{1}{2}''$ Double Angle Strips 3 are secured to the inner ends of the Angle Girders. Two angle members 4 also are fitted.

Two $5\frac{1}{2}''$ Angle Girders are fitted at the outer end of the Girders, as shown in Fig. 1, and to the top of these are bolted $1'' \times 1''$ Angle Brackets 5.

The lower main plane can now be built and fitted. This is formed from two $12\frac{1}{2}'' \times 2\frac{1}{2}''$ Strip Plates overlapping three holes, and it is fitted with a $3\frac{1}{2}''$ Strip 6 in the middle and Flat Brackets at each end, as shown in Fig. 3. The purpose of the Strip and the Flat Brackets is to carry pairs of $12\frac{1}{2}''$ Strips that form the edges to the wing. The upper main plane is constructed in a similar manner, except that two additional $3\frac{1}{2}''$ Strips 7 are fitted for strengthening purposes.

The under side of the upper wing carries six $3\frac{1}{2}'' \times \frac{1}{2}''$ Double Angle Strips, three on the leading edge and three on the trailing edge, as shown in Fig. 3. To these are bolted the upper ends of the interplane struts, the lower ends of which are attached to the bottom main plane by $\frac{1}{2}'' \times \frac{1}{2}''$ Angle Brackets. The struts at the ends are secured by means of Double Brackets.

To the under side of the top and bottom planes are bolted long compound girders 8 and 9. These two members form the trailing section of the fuselage. This carries the two rudders, which are represented by $5\frac{1}{2}'' \times 1\frac{1}{2}''$ Flexible Plates, placed vertically and joined together by means of four $2\frac{1}{2}'' \times \frac{1}{2}''$ Double Angle Strips. Two of these Double Angle Strips are shown at 11, Fig. 3, and carry a Double Bent Strip 10, Fig. 1, and a Flat Bracket 12, Fig. 3. The Flat Bracket supports the upper end of a $3\frac{1}{2}''$ Rod 13, the lower end of which is journalled in one of the Double Angle Strips joining the rudders and the end of the member 9. The Double Bent Strip 10 forms a support for the $3\frac{1}{2}''$ Rod 14, the upper end of which is journalled in the same manner as the lower end of the Rod 13. Collars are used to hold both Rods in position.

The elevators are next fitted and it should be noted that, contrary to modern practice, these are placed forward of the main planes. A $5\frac{1}{2}'' \times 2\frac{1}{2}''$ Strip Plate is first bolted to the $1'' \times 1''$ Angle Brackets 5. This Plate carries two $2\frac{1}{2}''$ Small Radius Curved Strips 16 and 16a, and also four $2\frac{1}{2}'' \times \frac{1}{2}''$ Double Angle Strips, to two of which are bolted two $2\frac{1}{2}'' \times 1\frac{1}{2}''$ Flexible Plates.

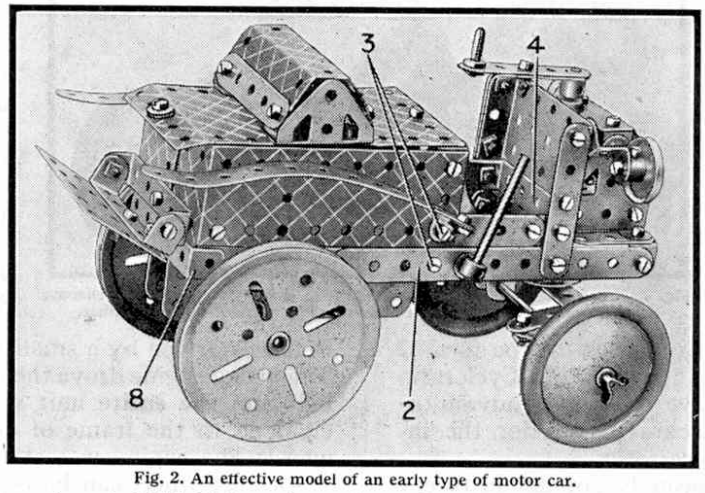

Fig. 2. An effective model of an early type of motor car.

The propeller shafts are carried in frameworks secured to two of the interplane struts. Each is built up in the following manner. Two $2\frac{1}{2}''$ Strips 17, Fig. 1, are secured to the third rear strut from the outer ends of the planes. The Bolt joining these two Strips also holds one end of a $2\frac{1}{2}'' \times \frac{1}{2}''$ Double Angle Strip carrying a $3\frac{1}{2}''$ Rod 18 that forms the propeller shaft. This has secured to it at one end a $1''$ fast Pulley and at the other a Coupling. The Coupling is fitted with two $\frac{1}{2}'' \times \frac{1}{2}''$ Angle Brackets that carry $3''$ Strips representing the propeller blades.

The $1''$ Pulleys on the propeller shafts are connected

by belts of cord to a ½″ Pulley 19 that forms the flywheel of the dummy four cylinder engine, consisting of two Couplings carried on a horizontal 2½″ Rod. Four Washers are placed on the Rod between the two Couplings, which are secured by set-screws to two Double Bent Strips 20. The four cylinders of the engine are represented by Collars held in place by ⅜″ Bolts.

The controls can now be fitted. A 2½″×1″ Double Angle Strip 21 is first bolted to the lower plane to support a 3½″ Rod carrying a Coupling and a Collar 22, Fig. 3. The control column 23 is fitted to the Coupling by a Small Fork Piece, and a Swivel Bearing connects it to a compound rod. A second small Fork Piece is free to turn on the outer end of the compound Rod and is prevented from sliding off by means of a Collar. A nut, carried on a bolt passed into one hole of the Small Fork Piece prevents this part from sliding down the compound Rod by bearing lightly against the Collar already mentioned. This bolt also secures a Flat Bracket to the Fork Piece, and this is pivotally connected to the Crank 24. This Crank is secured on a Rod as shown and it represents the elevator control.

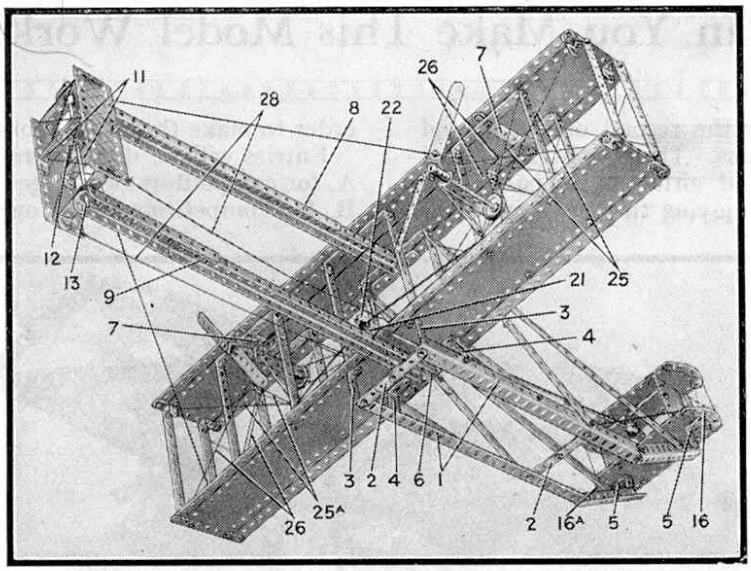

Fig. 3. An underneath view of the Wright Biplane illustrated on the opposite page.

Ailerons had not been invented when this machine was built, and the effect of banking was obtained by "warping" the wings. In the model this movement is obtained by moving the control column from side to side, thus rocking the Collar 22, carrying a Bolt. Two double cords 25 and 25a are used to connect the bolt to the ends of the upper plane. Two continuous cords 26 connect the two ends of the lower planes, and these pass through the top unoccupied holes of four interplane struts. The rudder bar 27, a 2½″ Strip, is coupled to the rudder by two cords 28.

List of parts required to build the Wright Biplane Model: 10 of No. 1; 20 of No. 2; 2 of No. 2a; 5 of No. 3; 6 of No. 4; 10 of No. 5; 2 of No. 6a; 8 of No. 8; 4 of No. 9; 5 of No. 10; 4 of No. 11; 22 of No. 12; 4 of No. 12a; 4 of No. 12c; 1 of No. 13a; 2 of No. 15b; 5 of No. 16; 1 of No. 17; 1 of No. 18a; 2 of No. 22; 1 of No. 23a; 2 of No. 35; 156 of No. 37; 6 of No. 37a; 22 of No. 38; 3 of No. 45; 1 of No. 46; 2 of No. 48; 10 of No. 48a; 6 of No. 48b; 8 of No. 59; 1 of No. 62; 6 of No. 63; 4 of No. 90a; 2 of No. 111; 6 of No. 111c; 1 of No. 116a; 2 of No. 165; 2 of No. 188; 2 of No. 189; 2 of No. 195; 4 of No. 197.

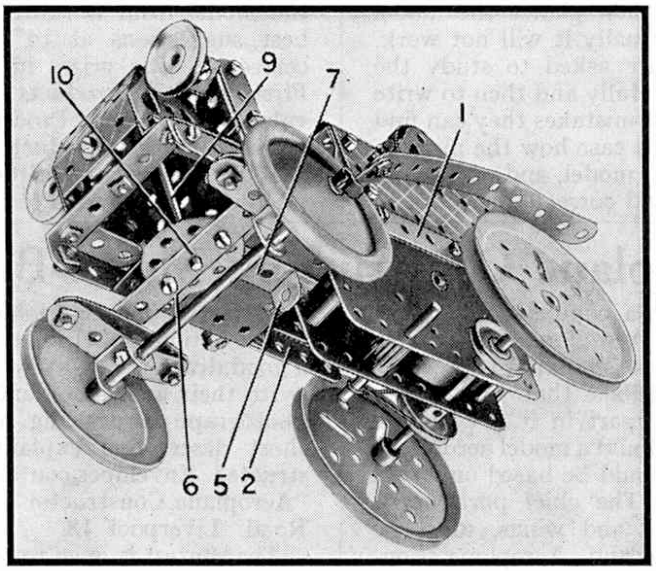

Fig. 4. This illustration shows how the power unit is fitted in the early model car.

The second model can be built with D Outfit and is driven by a No. 1 Clockwork Motor concealed under the seats.

The side member 1 of the model consists of two 5½″ Strips overlapping seven holes. The other side member 2 is formed from two 5½″ Strips, also overlapping seven holes, but the rear strip is placed above the front one, the lower edge of the former resting on the upper edge of the latter. This arrangement is necessary in order to expose the winding spindle of the motor. The two Strips forming this side member 2 are held together by a Flat Bracket, secured in place by the bolts 3, and a 2½″×½″ Double Angle Strip 4 fitted with two Flat Brackets.

The lower bolts 3 and the corresponding one on the opposite side of the model secure in place a 2½″×½″ Double Angle Strip. This is fitted with a ½″ Reversed Angle Bracket 5 carrying a Double Bracket that is bolted between the side plates of the Motor. The Double Angle Strip also carries a 2½″×2½″ Flexible Plate, forming the floor of the car, and in addition two 2½″ Strips 6 and 7 are fitted. The Strip 6 is attached by means of two Angle Brackets to the side members. The front hole of the Strip 7 carries the lower end of the steering column.

One end of the Motor is secured to the Bracket 5 as already described, and the opposite end is secured by a Double Bracket to the Double Angle Strip 8. This is bolted to the member 1. The axle carrying the rear wheels is journalled in the side plates of the motor and the drive is taken to a 1″ Pulley on this by means of a Rubber Band from the motor driving shaft.

The steering gear is arranged as follows. A 3½″ Rod 9 carries at its lower end a Bush Wheel to which is bolted two 3½″ Strips 10. Two 2½″ Strips are bent in the manner shown in Fig. 4 to represent the springs and fitted at each end of Strip 10. A Double Bracket secured to the lower member of each spring forms a bearing for the front axle on which the front wheels are free to rotate.

The "box" portion of the model represents the seats, and it consists of two 5½″×1½″ Flexible Plates bent in the manner shown in Fig. 2. The front ends of these plates are joined by a 2½″×½″ Double Angle Strip that supports one end of a 4½″×2½″ Flexible Plate. The other end of this Plate is held in place by an Angle Bracket. The back of the seats is secured in position by Angle Brackets.

List of parts required to build Model Car: 7 of No. 2; 2 of No. 3; 11 of No. 5; 2 of No. 6a; 7 of No. 10; 4 of No. 11; 12 of No. 12; 1 of No. 15; 2 of No. 16; 2 of No. 19b; 4 of No. 22; 1 of No. 24; 2 of No. 35; 65 of No. 37; 4 of No. 37a; 11 of No. 38; 1 of No. 48; 7 of No. 48a; 1 of No. 51; 1 of No. 59; 1 of No. 62; 2 of No. 90a; 6 of No. 111c; 1 of No. 115; 3 of No. 125; 2 of No. 126; 2 of No. 126a; 1 of No. 186; 2 of No. 187; 2 of No. 188; 2 of No. 189; 2 of No. 190; 1 of No. 191; No. 1 Clockwork Motor.