New Meccano Electric Clock Mechanism

Interesting "Waiting-Train" Movement

ONE of the most serious difficulties encountered in the past in the construction of electric turret clocks has been that of ensuring good time-keeping in all weather conditions. It was possible to protect the dials from wind, snow and sleet by covering them with glass, but this introduced the further difficulty that the glass often reflected the sunlight, so that glare made it impossible to read the dials. A solution to this problem is provided by the "waiting-train" movement. Hands driven by this are unaffected by weather conditions, so that the clocks, unlike weight-driven mechanical clocks, always maintain their time-keeping qualities. The "moving fingers" are unaffected by snow or sleet that would stop any mechanically-driven exposed turret clock.

The "Pul-syn-etic" waiting-train turret clock movement designed by Gent and Co. Ltd., of Leicester, provides practically unlimited power for driving the exposed hands of large clocks, and is under the constant control of the time-transmitter, which may be fixed in the base of a building or in any other suitable position. The "power factor" of the waiting-train movement is an electrically-driven pendulum, known as a motor pendulum, the function of which is not to keep time, but to drive by means of a pawl, a ratchet wheel, tooth by tooth, at each vibration. The ratchet wheel, in turn, by means of worm gearing, drives the hands of the clock. By a simple device the motor pendulum is re-energised by an electro-magnet, when its oscillations fall below a pre-determined arc. Under normal working conditions re-energisation takes place about once per minute, but when heavy work is thrown on to the movement as the result of resistance and wind pressure on the hands, the motor pendulum becomes energised more often—at each complete vibration if necessary. When it is energised at each complete vibration, the motor pendulum develops 30 times its normal power, and it is impossible to stop the movement by hand, even when exerting one's full power on the worm wheel.

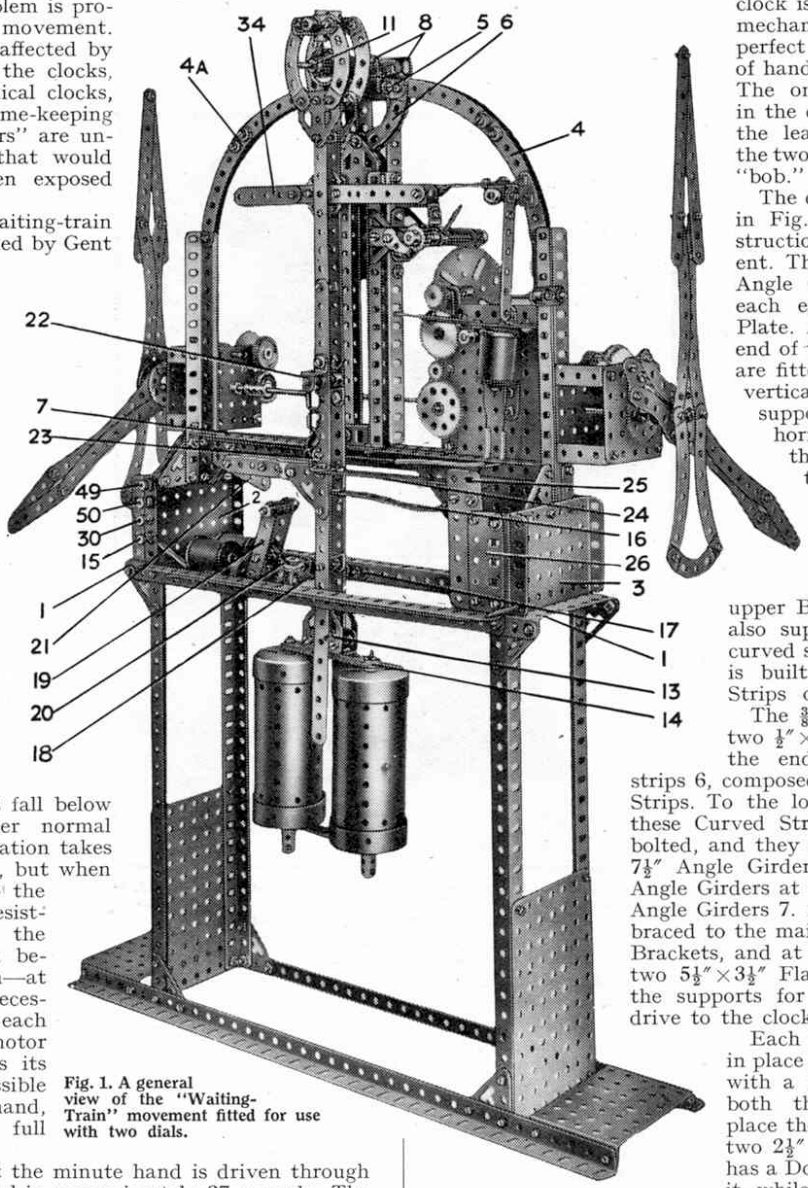

Fig. 1. A general view of the "Waiting-Train" movement fitted for use with two dials.

The gear ratio is such that the minute hand is driven through a half-minute space on the dial in approximately 27 seconds. The pawl of the motor pendulum is then automatically lifted out of engagement, so that, although the motor pendulum maintains its action, the hands remain stationary for two or three seconds, locked by the worm wheel. A current impulse from the transmitter, dead on the half-minute, releases the pawl, and the hands are driven forward for another half-minute on the dial. As a rest of two or three seconds is inappreciable, the hands appear to move with absolutely regular progression, and do not move in half-minute jumps, as is the case in impulse movement.

Among the many famous clocks operated by the "Pul-syn-etic" waiting-train movement of Gent and Co. Ltd., is the Royal Liver Clock at Liverpool. This fine clock, which has four faces measuring 25 ft. in diameter, is one of the most conspicuous features of Merseyside. Another fine clock is the Singer Clock at Clydebank, Glasgow. This is the largest electrically-operated true turret clock in the British Empire, and has four faces each 26 ft. in diameter.

The Meccano model described here is a splendid reproduction of a standard "waiting-train" mechanism, and if an accurate master clock is used for operating the delay mechanism it will keep almost perfect time and will drive two pairs of hands for dials of 12-in. diameter. The only non-Meccano parts used in the construction of the model are the lead weights concealed within the two Boilers forming the pendulum "bob."

The complete mechanism is shown in Fig. 1, and from this the construction of the frame will be apparent. The base consists of two 18½″ Angle Girders secured together at each end by a 3½″×2½″ Flanged Plate. At a position 3½″ from each end of the base two Corner Brackets are fitted, forming supports for two vertical 12½″ Angle Girders. These support, at their upper ends, two horizontal 12½″ Angle Girders that are braced by means of two further Corner Brackets. The two 7½″ Angle Girders are connected together at their round holes by ⅜″ Bolts, and are spaced apart by four 7½″ Strips. The upper Bolts of the compound girder also support the lower end of two curved strips 4 and 4a, each of which is built up from two 4½″ Curved Strips overlapping two holes.

The ⅜″ Bolts 5 each hold in place two ½″×½″ Angle Brackets, and also the ends of two built-up curved strips 6, composed of 2½″ small radius Curved Strips. To the lowest point in the centre of these Curved Strips two Flat Trunnions are bolted, and they carry the upper ends of four 7½″ Angle Girders secured by means of 1½″ Angle Girders at their lower ends to two 12½″ Angle Girders 7. At one end these Girders are braced to the main frame by two large Corner Brackets, and at the other they are bolted to two 5½″×3½″ Flat Plates. These Plates form the supports for the gears transmitting the drive to the clock hands.

Each pair of Angle Brackets held in place by one of the Bolts 5 is fitted with a 1½″ Angle Girder, and when both these short Girders are in place they are connected together by two 2½″ Angle Girders. One of these has a Double Arm Crank 9 secured to it, while the corresponding Crank 10 is not bolted to its respective Girder. A 3″ Rod 11 is secured in the bosses of the two Double Arm Cranks, forming a support for two ½″ Pinions, in the uppermost teeth of which rock two Centre Forks. As shown in Fig. 2, these Centre Forks are prevented from sliding laterally by the 1″ loose Pulleys 12, and they are attached to the top of the pendulum by two Couplings. A short Rod, on which these Couplings are locked in place, is gripped in the bosses of two Double Arm Cranks carrying at each end a 2½″ small radius Curved Strip. Each pair of these Curved Strips is bolted to a Flat Trunnion that in turn is bolted to one of the top Strips of the pendulum.

Each side of the pendulum is built up from one 9½″ Strip and one 12½″ Strip, and the two compound strips are connected together by

Double Brackets. At a point 4 in. from the bottom of the pendulum two Flat Trunnions 13 are fitted, and these carry a channel section girder composed of two 1½″ Angle Girders. Four 3½″ Strips 14 are now fitted, and the outer holes of these carry two 6″ Threaded Rods locked in place by nuts. Boilers, filled with lead, are passed on to the Threaded Rods, and then are held in place by means of a 3½″ Strip and two Threaded Couplings. The total weight of the lead in the pendulum "bob" must be about 8 lb.

The next portion of the model to be built is the impulse motor and contacts. The impulse motor consists of two Elektron Magnet Coils and two Cores, the latter parts being secured to a 1½″ Angle Girder bolted to one of the Plates 1. The Magnet Coils are connected in series, and one of the two unoccupied terminals, one being on each coil, is connected to the Terminal 15. The other coil terminal is joined up by a long length of insulated wire to the insulated Strip 16, the purpose of which will be described later. A Rod 18, secured in the boss of a Double Arm Crank 17, carries a rocker arm 19 and a Coupling 20. The Coupling, which is locked by one of its Grub Screws to the Rod, carries a thick rubber band or band of paper, against which the impulse arm rests when not energising the pendulum. This arrangement reduces the noise of the clock mechanism considerably when it is in operation. The impulse arm is built up from two 1½″ Angle Girders, bolted together to form a short channel section girder, and fitted with two 2½″ Strips. The 1½″ Angle Girders also carry an armature built up from a number of 1½″ Flat Girders held in place by a ½″ Bolt.

The top holes of the 2½″ Strips form the bearings for a 1½″ Rod on which a number of Washers are free to rotate. The Rod is prevented from sliding sideways by means of two Collars, and the Washers roll against the 2½″ Strip 21 when the impulse motor is excited. This short Strip is bolted to a 4½″ Strip that is braced to the outer member of the pendulum by a large Corner Bracket. It will be seen from Fig. 1 that the 4½″ Strip is bent slightly in order to allow the Strip 21 to make proper contact with the Washers. This part of the model will need a little careful adjustment in order to allow it to work efficiently.

A ½″ Reversed Angle Bracket 22 is now bolted to the pendulum, and it supports the outer end of a short Rod mounted as shown in Fig. 2. This part carries a freely moving Threaded Crank in the threaded hole of which is fitted the screwed portion of a Rod Socket, a nut being used for locking purposes. A Centre Fork, carried in this latter part, brushes across the checking clip 23 that is carried on one end of a 5½″ Strip 24. The checking clip consists essentially of a ½″×½″ Angle Bracket, the two lugs of which are bent until they are at an angle of 45 degrees to each other. The part is then bolted to a second ½″×½″ Angle Bracket by means of its slotted hole, a small slot being formed between the Bracket and a Washer carried on the securing bolt.

The 5½″ Strip 24 is attached to a ½″×½″ Angle Bracket that is bolted near the top of a 3½″ Flat Girder 25. This Girder is attached to the frame of the model by means of a second shorter Flat Girder 26. By making use of the slots in these two Girders it is possible to adjust the position of the checking clip in relation to the Centre Fork already mentioned.

A Silver Tipped Contact Screw 27, fitted by means of two 6 B.A. Nuts to the 5½″ Strip, is so arranged that it almost touches a second similar Screw 28 on the end of the 4½″ Strip 16. This Strip is secured to, but insulated from, a ½″×½″ Angle Bracket that is attached to the Flat Girder 25 by means of the Bolt 29, Fig. 2.

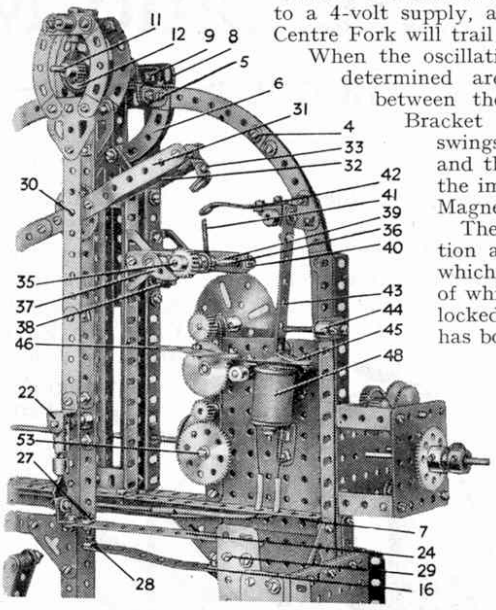

Fig. 2. Each pair of hands is controlled by a stage of gearing similar to the gear-train shown in this illustration.

If the Terminal 15 and earth Terminal 30 are now connected to a 4-volt supply, and the pendulum is set in motion, the Centre Fork will trail backward and forward over the clip 23. When the oscillations of the pendulum fall below a predetermined arc, however, the Centre Fork catches between the Washer and the bent ½″×½″ Angle Bracket of the clip 23. As the pendulum now swings from right to left the Strip 24 is depressed and the contacts 27 and 28 meet. This causes the impulse arm to be drawn towards the two Magnet Coils, and thus re-energise the pendulum.

The next parts of the model to receive attention are the ratchet and timing mechanisms, which are shown in Fig. 2. A Pivot Bolt, part of which is shown at 30, carries a Bush Wheel locked on its plain section. This Bush Wheel has bolted to it two 5½″ Strips 31 and 32, bent as shown. The Strip 32 carries a 1½″ Angle Girder, the use of which will be described later. The Strip 31 is fitted at its end with a Corner Angle Bracket to which is bolted a ½″×½″ Angle Bracket 33. In order to counter-balance the weight of the built-up pawl 33, two 2½″ Strips 34 are carried at the opposite end of the two 5½″ Strips.

The Angle Bracket 33 is used in conjunction with a Ratchet Wheel 35, one tooth of this Wheel being picked up for every complete movement of the pendulum. It is mounted on a Rod 36, journalled in bearings as shown in Fig. 3, and is prevented from moving backward by means of a Pawl, without boss, 37. This Pawl is carried loosely on a ¾″ Bolt and spaced away from its supporting Strip by two Collars. A short length of Spring Cord 38 keeps the Pawl in engagement with the Ratchet Wheel. The Rod 36 carries a Collar 39 and a ½″ Pinion 40, the Collar having a 1″ Threaded Rod 41 locked in one of its threaded holes as shown in Fig. 3.

When the pendulum is working the Threaded Rod makes one complete revolution in approximately 26 seconds and, as the Pawl is moved round one tooth at the end of one complete revolution, the Threaded Rod strikes the end of the 2½″ Strip 42. This Strip, which is bent as shown in Fig. 3, is attached to a 3½″ Strip 43 by means of a 1″×1″ Angle Bracket; and the unit so formed is pivotally mounted on a short Rod by means of a Double Bracket. This Rod is mounted in two 1″ Triangular Plates secured to the Strips 4. The downward movement of the Strip 42 is limited by an adjustable stop 44 consisting of a Threaded Crank and ¾″ Bolt. As the Strip 42 is raised by the Rod 41, it lifts the 1½″ Angle Girder secured to the Strip 32, thereby disengaging the pawl 33 from its Ratchet Wheel 35 and allowing the pendulum to swing idly. The pawl is kept in this position in the following manner.

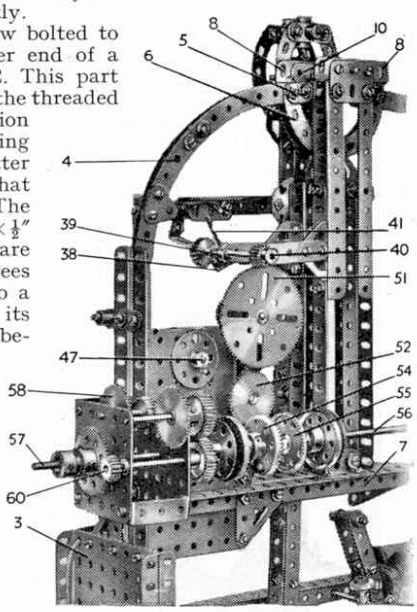

Fig. 3. The delay mechanism by which means the clock is controlled.

The action of the Threaded Rod 41 causes the Strip 43, Fig. 2, to move across an Obtuse Angle Bracket 45, bolted to a pivotally mounted 3½″ Strip counterbalanced by two 2½″ Strips 46. The 3½″ Strip is locked on a Collar by a nut and bolt, the Collar being free on a 1½″ Rod locked in the boss of a Bush Wheel 47, Fig. 3. It will now be seen that until the Flat Bracket 45 is depressed the pendulum will not transmit any movement to the driving Pinion 40. A Magnet Coil 48, excited at half-minute intervals from a master-clock, draws the Flat Bracket out of engagement with the Strip 43, thereby resetting the impulse mechanism of the clock. This arrangement allows the pendulum to vary its speed within a limit of four seconds slow or fast, without in any way impairing *(Continued on page 264)*

Parts Required to Build the Model:

2	of No.	1	2	of No.	9b	1	of No.	16	6	of No.	27	8	of No.	53	2	of No.	79a	14	of No. 111c	2	of No. 162
8	„ „	1b	2	„ „	9d	3	„ „	16a	2	„ „	27a	1″	„ „	58	2	„ „	82	1	„ „ 125	3	„ „ 171
12	„ „	2	10	„ „	9f	1	„ „	16b	1	„ „	27c	19	„ „	59	8	„ „	89	2	„ „ 126	1	„ „ 179
4	„ „	2a	6	„ „	11	6	„ „	17	2	„ „	28	1	„ „	62	12	„ „	89b	6	„ „ 126a	6	„ „ 182
9	„ „	3	8	„ „	12	4	„ „	18a	4	„ „	31	1	„ „	62a	4	„ „	90	15	„ „ 133	3	„ „ 1538
14	„ „	5	2	„ „	12a	2	„ „	18b	230	„ „	37	5	„ „	62b	10	„ „	90a	4	„ „ 133a	3	„ „ 1539
5	„ „	6a	1	„ „	12c	2	„ „	21	20	„ „	37a	6	„ „	63	1	„ „	103d	2	„ „ 142c	3	„ „ 1561
2	„ „	7a	1	„ „	13a	3	„ „	22	134	„ „	38	3	„ „	63c	1	„ „	103f	1	„ „ 147b	4	„ „ 1563
8	„ „	8	1	„ „	14	8	„ „	24	6	„ „	48	3	„ „	65	8	„ „	103h	1	„ „ 147c	2	„ „ 1569
8	„ „	8b	1	„ „	15	7	„ „	25	1	„ „	48b	4	„ „	72	1	„ „	111	1	„ „ 148	5	„ „ 1573
2	„ „	9	2	„ „	15b	6	„ „	26	4	„ „	52a	2	„ „	77	8	„ „	111a	1	„ „ 154a	11	„ „ 1583